MOSTOSTAL
SCAFFOLDING
FORMWORK

ALTRAD

FORMWORK SYSTEMS

CATALOGUE

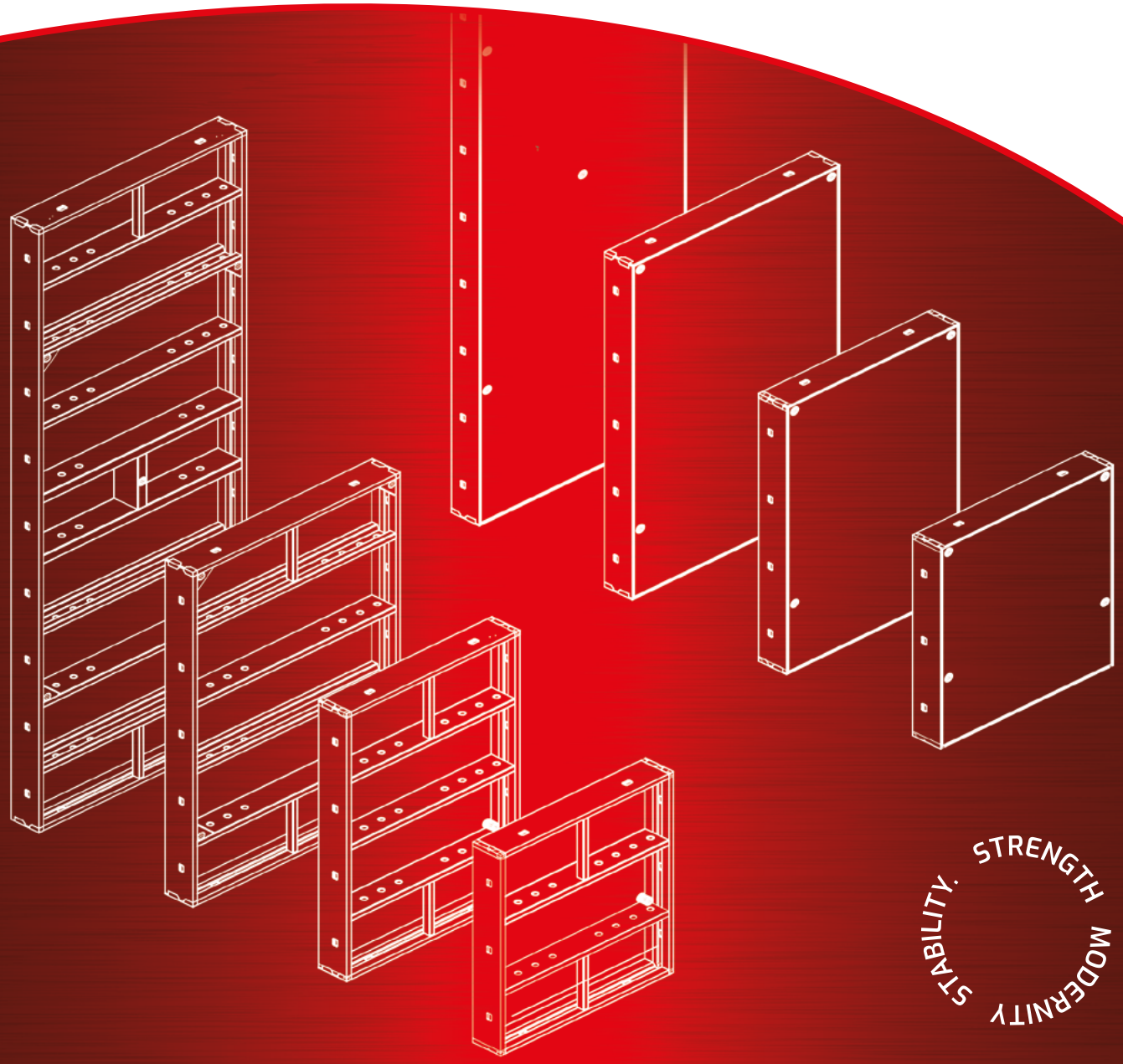

STRENGTH. MODERNITY. STABILITY.

MOSTOSTAL
SCAFFOLDING
FORMWORK

ALTRAD

FORMWORK SYSTEMS

CATALOGUE

www.altrad-mostostal.pl

TABLE OF CONTENTS

INTRODUCTION

For many years ALTRAD-MOSTOSTAL have provided their clients with modern and safe formwork and scaffolding systems. In the meantime the company has continuously mastered their production and technological programme as well as they implement innovations to be able to keep satisfying your individual expectations and meeting challenges connected with the more and more sophisticated needs of the broadly defined construction market, industry or energy sector. ALTRAD-MOSTOSTAL products feature long service life which is ensured by well-thought-out structural solutions and reliable hot dip galvanizing technology among other things. These aspects combined with the skilled equipment operation and proper maintenance allow the systems to be used for many years and ensure satisfaction of the wise investment made.

ALTRAD-MOSTOSTAL designing and production programme is performed according to the Quality Management System procedures which comply with the ISO 9001:2009 standards and ensure the proper procedure on each stage starting from the designing phase compliant with the material management and procurement to the production, quality control and logistics to the handing the product over to the client. Moreover, thanks to the active participation of their products in the export directed outside the country and international collaboration ALTRAD-MOSTOSTAL holds many foreign safety certificates as well as SLV authorisation to produce steel and aluminium structures for the German market.

ALTRAD-MOSTOSTAL is also a scaffolding industry leader. MOSTOSTAL Plus frame systems, ROTAX Plus modular systems and MP series mobile towers may be found in the construction sector and industry as well as power sector in Europe and outside of Europe.

When it comes to our formwork and scaffoldings we rely on the innovative and economic solutions.

ALTRAD-MOSTOSTAL is a recognised partner and a reliable supplier of a very rich and diverse construction accessories offer. What's more, the Company acts basing on a very reliable financial and organisational foundations of the international ALTRAD Group headquartered in France.

Please feel welcome to work with us.

I WALL FORMWORK – INTRODUCTION

ALTRAD-MOSTOSTAL offers compatible wall formwork systems that include:

- MIDI BOX light system (60 kN/m^2);
- MIDI BOX heavy system (80 kN/m^2);
- square and rectangular section pole forming system;
- lift shaft formwork;
- one-sided formwork with the supporting trestle system.

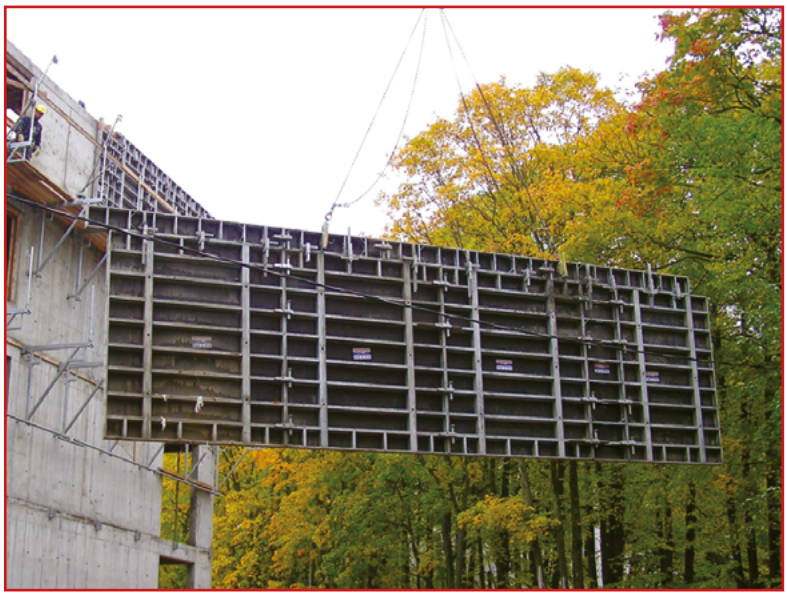

ALTRAD–MOSTOSTAL formwork features a frame structure made of steel sections 12 cm thick which are hot dip galvanised and filled with a special 15 mm thick plywood planking. Full range of the wall formwork system elements that are compatible, self-complementary and exchangeable makes it possible to design a perfect formwork for any wall. By using the full set of the system elements you will be able to seamlessly construct virtually each facility in a simple, fast and economic, and above all safe manner.

Wall formwork is:

- spatial multi-use system;
- system for average and heavy loads, depending on the board version used it withstands pressure of fresh concrete ranging from 60 up to 80 kN/m^2;
- high-end product made of the materials of the appropriately high quality – hot dip galvanised steel; planking made of multilayered plywood covered on both sides with the phenol foil of the proper density;
- smoothness of the concrete surface which does not have to be plastered when the formwork is removed but must be covered with thin plaster or luted.

MIDI BOX formwork systems are used to make reinforced concrete structures such as:

- combined footing,
- mid-sized and heavy walls,
- square and rectangular section poles,
- binders,
- lift shafts,
- and many other typical and atypical structures used nowadays in construction, industry etc.

Versatility of the formwork systems ensures the complete usage of the same and multi-purpose connecting and joining elements such as locks, transoms, bolts etc. as well as the auxiliary accessories such as working (inspecting) platforms, adjustable (tilting and raking shore) supports to perform fast and accurate adjustment adapted to each board type. Crosspiece and hole distribution ensures the complete system compatibility. The boards are connected with locks (L260, L710) which alone serve as an element that levels and stiffens the formwork and provides strong and tight connections. It applies both to the vertical and horizontal joints at the same time.

Fully compatible ALTRAD-MOSTOSTAL formwork systems are used as the wall formwork installed without any need to use the crane (manually) or with the crane when the elements are large. The system also ensures fast repositioning of the complete formwork sets without any need to disassemble the components each time (max. 30 m²). To do this there must a crane on the construction site and the special transport hooks certified by UDT must be used.

- **MIDI BOX wall formwork (60 kN/m²):**

An economic small-sized system to be installed manually consisting of the boards 90 cm and 120 cm high and 25 cm to 90 cm wide. This system both supplements and replaces the boards of standard heights.
The formwork is mainly dedicated for the construction of foundations, binders and walls (cellars). The boards withhold pressure of the fresh concrete of up to 60 kN/m².

MIDI BOX wall formwork (80 kN/m²)

It is a wall formwork so that it can be installed on the construction site in two manners depending on the width of the working boards, i.e.:

- without the crane – boards within 25 do 90 cm,
- and with the crane – boards within 90 to 240 cm.

MIDI BOX formwork is available with a full range of shuttering boards 150 cm, 270 cm, 300 cm and 330 cm high.
The permissible fresh concrete pressure is set for the MIDI BOX formwork at:

- 80 kN/m² – assembly without superstructures
- 55 kN/m² – assembly with superstructures.

The multi-purpose MB260 and BM710 formwork lock reliably connects the shuttering boards, joints the corners and poles and it the same time it allows for straightening the formwork plane.
The shuttering transoms and stiffening beams which replace the
BM710 lock provide additional stiffness (horizontal and vertical) of the walls of higher surface area.

Walls 270 cm, 300 cm and 330 cm high are connected with three BM260 locks for one board contact point. The shuttering boards in the level raisers are connected with the BM710 locks with a longer pressing foot (710 mm) so that the plane straightening the formwork is larger.

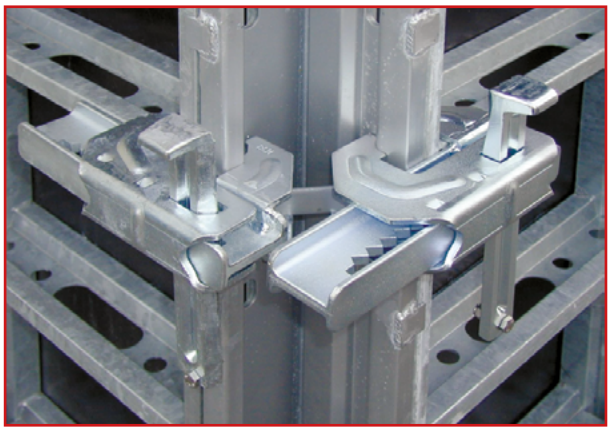

By using the radial slats it is possible to board multiple-sided structures with a radius of over 2.5 m. Having the possibility to choose from three widths of the radial slats of 15, 20 and 25 cm and all MIDI BOX boards it is possible to precisely set up the formwork. Radial slats are connected with the boards with the centring bowstrings installed alternately.

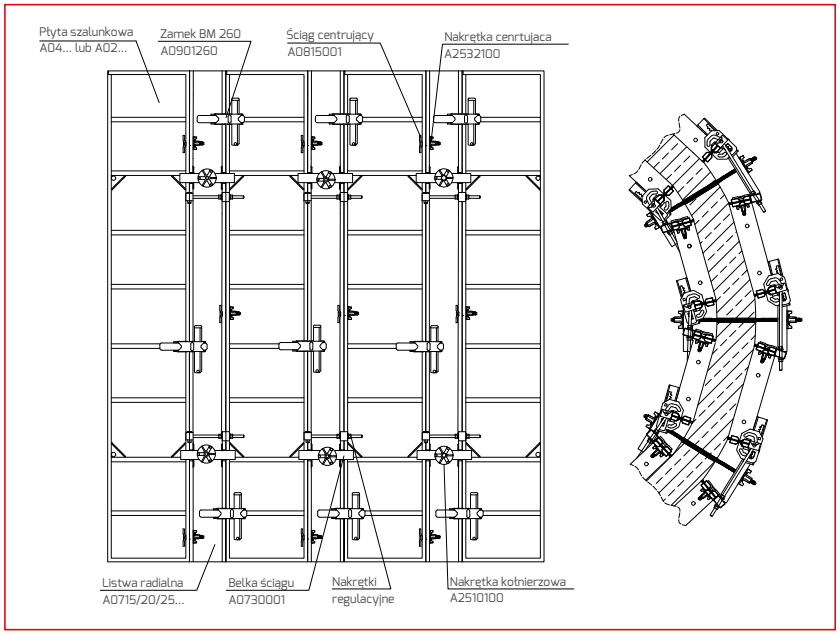

Radial strips – scheme

To supplement the wall length you should use the filling inserts. It is a perfect solution when there is no possibility to obtain the desired length of the formwork on the basis of the shuttering board system. In such case insert wooden or steel inserts between the boards.
ALTRAD-MOSTOSTAL offers typical 5 cm wide steel inserts and supplementary adjustable inserts which allow for compensating the formwork length within 7±30 cm. In the case of steel inserts boards should be connected with the BM260 and BM710 locks which can connect the inserts up to 14 cm long or boarding transoms that stiffen the formwork and clasp the inserts.

Wall formwork element for the exterior wall formwork is the climbing formwork bracket. The brackets are used on buildings up to H = 100 m high. Maximum formwork height: 4.2 m – without additional anchoring of the shuttering boards. Maximum bracket spacing: 1.35 m. The brackets should be anchored with the SKK cones and waved or loop B15 anchors. Cone is a recoverable element.

Diversity of the boards allows for an optimal set-up of any formwork. The formwork system ensures smooth surfaces which when the formwork is removed do not have to be plastered. Thin plaster or luting is all that is required.

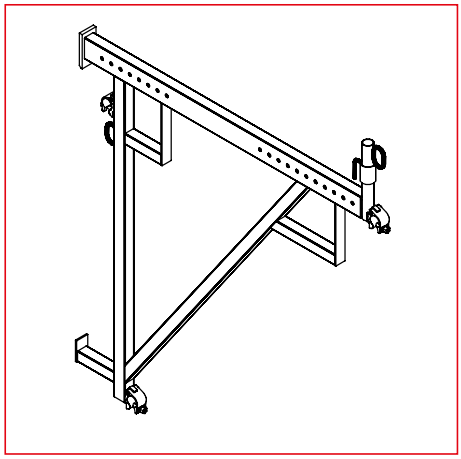

Climbing formwork Bracket

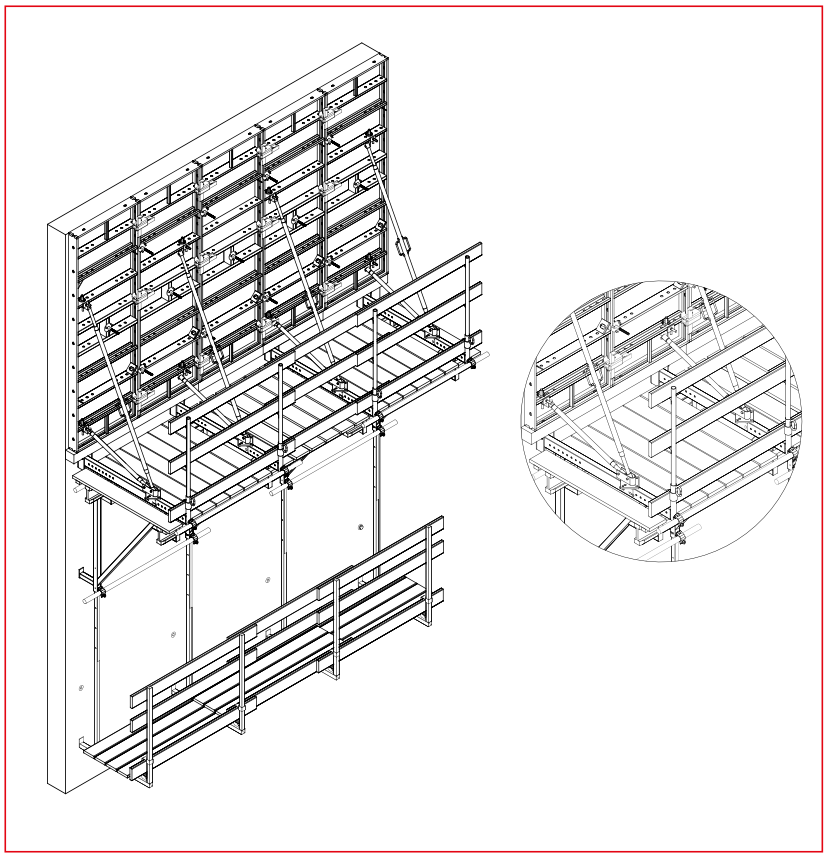

Climbing Formwork – scheme

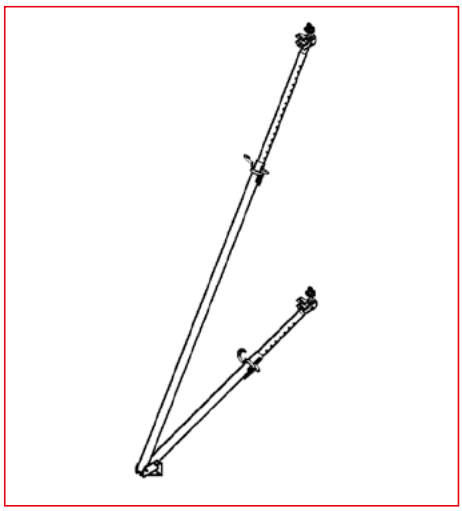

Tilting Support

The following elements allow the shuttering boards to be plumbed:
- tilting support – used to plumb the shuttering boards up to 3 m high,
- raking shore – used to plumb the formwork of the walls more than 3 m high.

The ribbed structure and protections of the MIDI BOX formwork sets protect the persons working on the construction sites during:

- installation,
- concreting,
- disassembly,
- repositioning.

ALTRAD-MOSTOSTAL formwork allows the selection of boards with modules placed every 5 cm vertically and horizontally. The shuttering boards may be connected in any configuration. Please remember that a basic board set-up is vertical. Horizontal set-up should be considered as a supplementary set-up.

LIFT SHAFT FORMWORK

Lift shaft formwork is used for fast assembly and disassembly of internal formwork in the lift shafts without the need to disassemble the individual elements. It is possible to do this with the formwork removing element that reduces the external size of the given formwork segment by 5 cm.

This allows for free removal of the formwork set from the lift shaft and its repositioning with the crane to any construction site area.

The formwork removing element is a system element of the MIDI BOX wall formwork. It is made of steel sections and steel sheet. It is fastened to the standard shuttering boards.

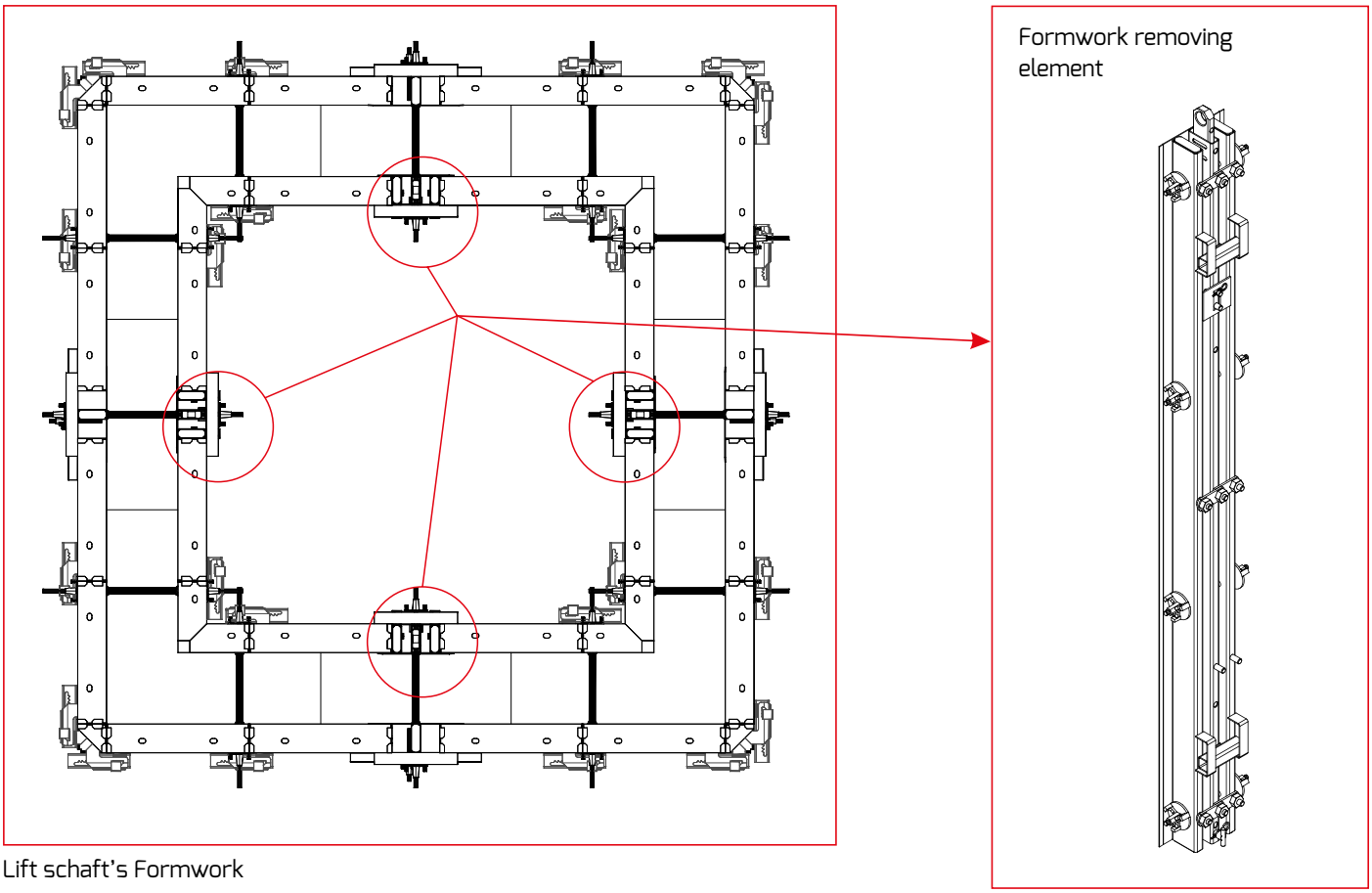

Lift schaft's Formwork

- **ASSEMBLY:**

The lift shaft assembly starts with the set-up of the internal segment.

One formwork wall is fitted with one formwork removing element. The widths of the boards and wooden inserts should be selected so that the formwork removing element is in the set symmetry axes. The steel sheet of the formwork removing element fits tight to the plywood of the adjacent boards due to the stiffening beams which additionally straighten the formwork.

To make the assembly easier it is recommended to install the boards up to 50 cm wide directly to the formwork removing element.

The maximum diameter of the nut that freely connects the formwork removing element with the base board is 10 cm.

The minimum dimensions of the internal shaft walls (length) for which a shaft set may be used are: 1.4 x 1.4 m. In this case 30 cm wide boards are used.

Then an external formwork part is installed and the wall thickness or the distance between the external and internal formwork is determined. The external formwork segment should be fitted exactly opposite the formwork removing element with the adjustable filling insert. The set components are connected with the formwork locks.

The assembled segment is delivered to the workplace and expanded to obtain the required dimension.

DISASSEMBLY:

The lift shaft formwork is disassembled with the crane and standard transport slings. The formwork removing element is fitted with the transport eye where the slings are attached.

After removing the bowstrings, stiffening beams, brackets and other wall mounting equipment the internal segment is attached to the slings and transported vertically.

Moving upwards triggers the mechanism that reduces the size of the segment and loosens it so that it can be easily removed from the working zone. The clearance between the lift internal dimension and the internal segment dimension is about 5 cm and is high enough to freely remove the segment. Once the lift shaft formwork is assembled it is used on each level of the facility constructed.

SUPPORTING TRESTLES (for one-sided formwork)

Supporting trestles are especially useful during:

- escarp strengthening,
- gravity wall construction,
- concrete filling of the walls near the existing facilities,
- securing rocky mountainsides.

The supporting trestle system consists of such elements as:

1. Trestle brackets

Elements used for the assembly of one-sided formwork during concrete filling of the vertical walls located near the existing buildings. The brackets allow for the construction of walls up to 4.5 m high with the fresh concrete pressure of up to 100 kN/m². The channels (2 pcs.) used as vertical beams ensure an easy installation of the shuttering boards with the bracket. The location of the one-sided formwork may be precisely adapted with the screw-threaded feet. The structure is anchored to the existing wall, ceiling or foundation by welding the bar to the reinforcement. Another solution includes using the loop anchors and V holders fixed to the reinforcement. The diameter and length of the bar are selected depending on the forces generated by the concrete pressure.

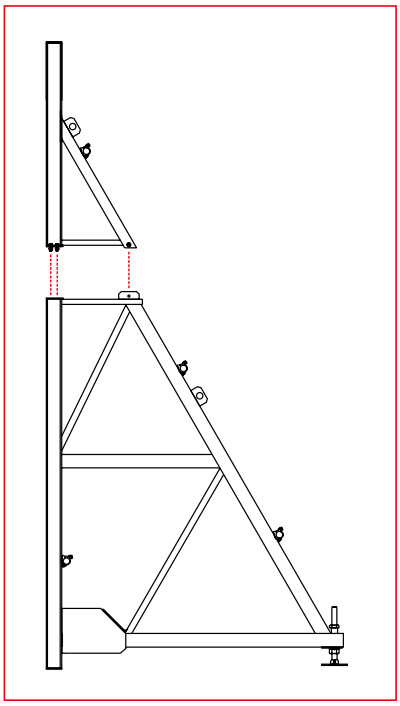

A and B type supporting trestles installation diagram

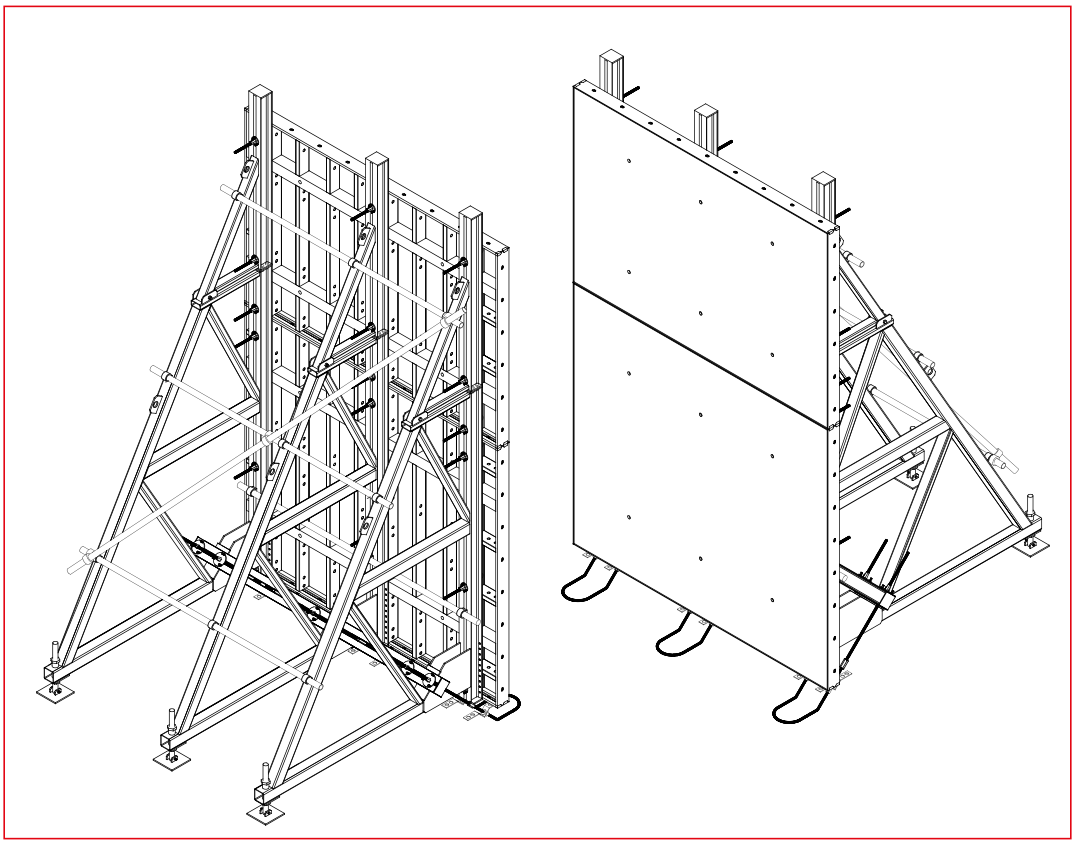

Diagram presenting the one-sided formwork that uses the A and B type supporting trestles

2. Angle bracket

An element that is used to set the location of the shuttering board in relation to the supporting trestle and which prevents the board from moving because of its own weight.

3. Wide angle bracket

An element that is used to set the location of the shuttering board in relation to the supporting trestle with the use of the stiffening beam and which prevents the board from moving because of its own weight.

4. Clamping beam – 1.2 m and 2.6 m

An element that is used to clamp the trestle brackets. It transfers the horizontal concrete pressure force to the anchors.

5. A and B type trestle bracket

These brackets have different heights. The B type trestle bracket is used for concrete filling of the walls up to 2.9 m high. The A type trestle bracket is used for concrete filling of the walls more than 2.9 m high. In such case it is placed onto the B type trestle bracket. The A type trestle bracket cannot be used alone and it is only used together with the B type trestle bracket. However, the B type trestle bracket cam be used alone.

Other wall formwork elements

Other wall formwork elements that work together with the supporting trestles are as follows:

- rotary coupling,
- tightener,
- flange nut,
- stiffening beam,
- bowstring,
- universal pipe,
- shuttering boards.

and:

Component manufacturer

- hexagonal nuts,
- V handles,
- loop, waved and hook anchors.

Please remember that the structure of the supporting trestles requires proper anchoring to the bas.

POLE FORMWORK (standard for poles and walls)

POLE FORMING

■ Pole forming with SP boards

A SP shuttering board is used for boarding of the square and rectangular poles in the module every 5 cm with the height of up to 5.4 m and section ranging from 55 x 55 cm for the SP70 boards to 75 x 75 cm for the SP90 boards. The permissible concrete pressure during pole forming with the SP boards is 80 kN/m².

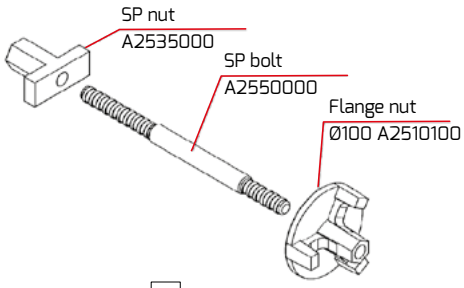

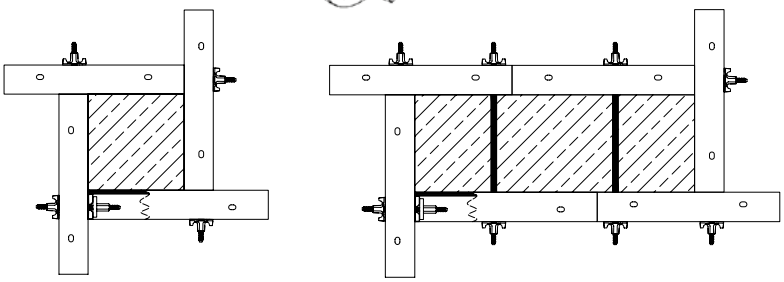

Board connecting diagram

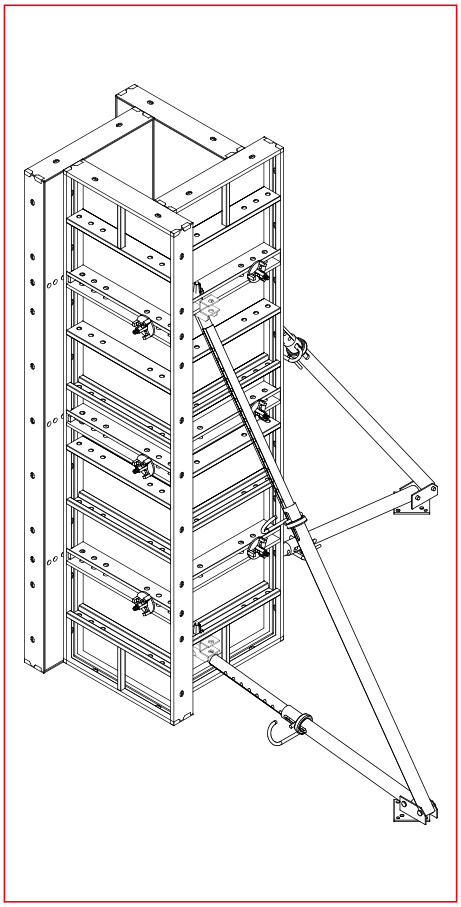

Pole forming diagram

■ 2. Pole forming with the base shuttering boards

The poles higher than the board may be formed by placing the boards on top of each other and connecting them with a formwork lock on each side.

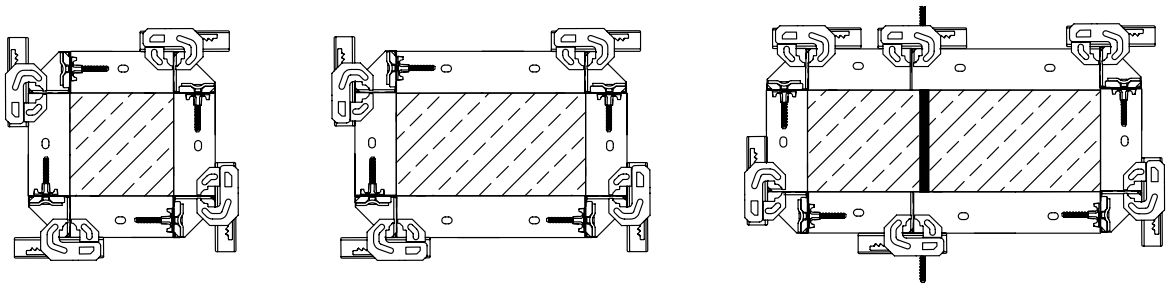

Pole forming – MIDI BOX boards and formwork locks

1. MIDI BOX FORMWORK

1. MIDI BOX shuttering board (60kN/m²)

MIDI BOX light (60 kN/m²) – small-sized board system used for forming the small foundation walls. The system is compatible with the MIDI BOX heavy system so that the MIDI BOX light boards are used as top bards when forming higher walls

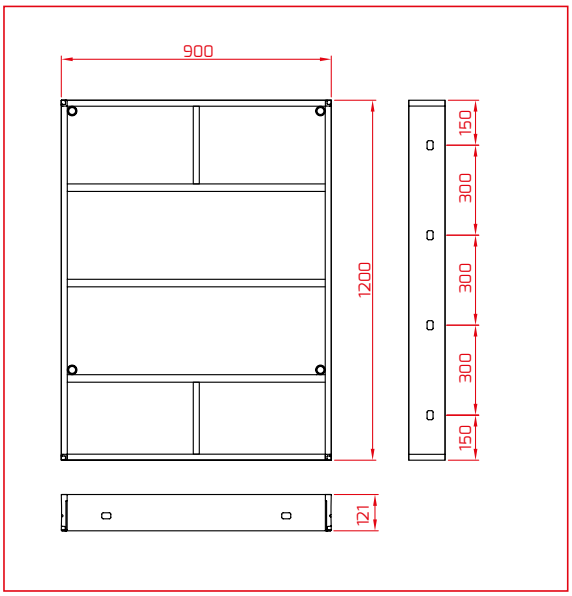

Index	Dimensions (cm)	Weight (kg)
A0209025*	90x25	14.11
A0209030	90x30	15.23
A0209045	90x45	18.60
A0209050*	90x50	20.43
A0209055*	90x55	21.56
A0209060	90x60	22.58
A0209065	90x65	23.80
A0209075	90x75	26.00
A0209090	90x90	29.38
A0212025*	120x25	18.02
A0212030	120x30	19.40
A0212045	120x45	26.60
A0212050*	120x50	25.67
A0212055*	120x55	27.09
A0212060	120x60	28.37
A0212065	120x65	29.87
A0212075	120x75	32.61
A0212090	120x90	36.81
A0215025*	150x25	21.88
A0215030	150x30	23.54
A0215045	150x45	29.39
A0215050	150x50	31.73
A0215055*	150x55	33.44
A0215060	150x60	34.88
A0215065*	150x65	36.77
A0215075	150x75	40.85
A0215090	150x90	45.90
A0227025*	270x25	37.42
A0227030	270x30	41.16
A0227045	270x45	50.18
A0227050*	270x50	53.50
A0227055*	270x55	56.33
A0227060	270x60	58.65
A0227065*	270x65	61.84
A0227075	270x75	72.99
A0227090	270x90	82.36

*Board made to order.

*Board market with red frazes are available in two playwood. versions.

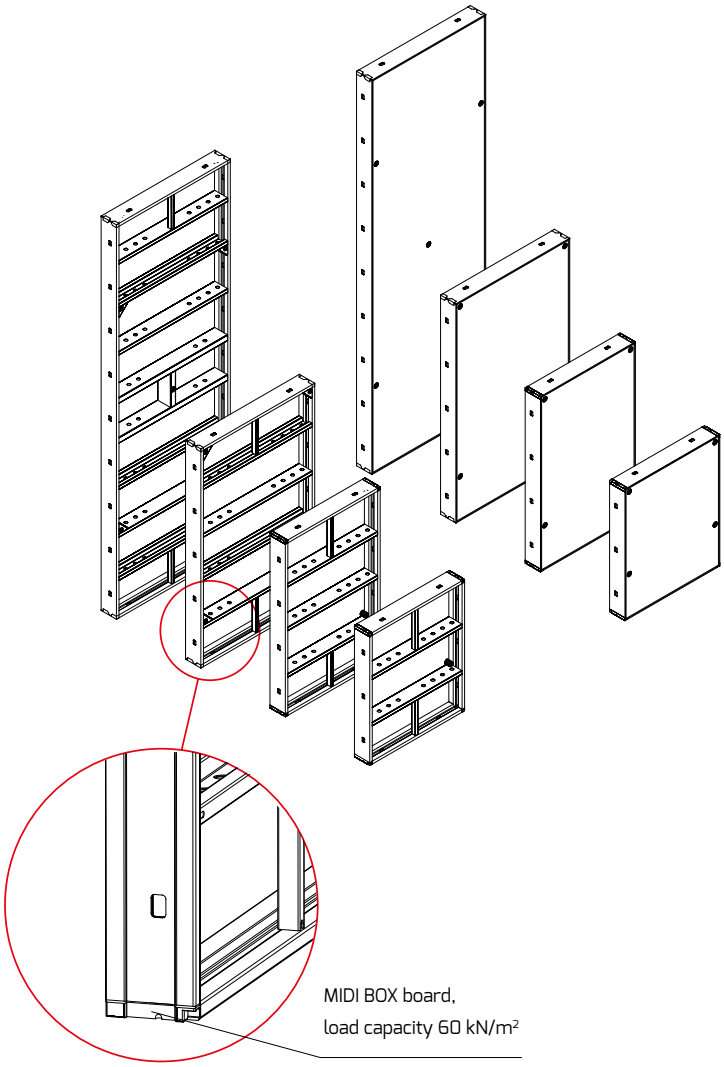

NOTE!

Bowstring hole spacing is determined in the assembly manual.

2. MIDI BOX shuttering boardX (80kN/m²)

MIDI BOX (80 kN/m²) – mid-size shuttering board system. Frames and ribbed shuttering boards are made of steel of high strength and are hot dip galvanised.

Index	Dimensions (cm)	Weight (kg)
A0415025*	150x25	27.33
A0415030	150x30	29.08
A0415040	150x40	33.75
A0415045	150x45	35.46
A0415050*	150x50	38.00
A0415055*	150x55	39.84
A0415060	150x60	41.46
A0415065*	150x65	43.50
A0415075	150x75	47.92
A0415090	150x90	53.50
A0427025*	270x25	46.80
A0427030	270x30	49.70
A0427040	270x40	51.7
A0427045	270x45	60.18
A0427050*	270x50	63.68
A0427055*	270x55	66.66
A0427060	270x60	69.16
A0427065*	270x65	72.49
A0427075	270x75	84.02
A0427090	270x90	93.91
A0427120	270x120	167.00
A0427180	270x180	258.00
A0427240	270x240	312.12

The offer also includes Universal shuttering board, see page 25.

*Board made to order.

*Board market with red frazes are available in two playwood. versions.

Index	Dimensions (cm)	Weight (kg)
A0430025*	300x25	51.93
A0430030	300x30	55.09
A0430040*	300x40	63.76
A0430045	300x45	67.12
A0430050*	300x50	70.97
A0430055*	300x55	74.24
A0430060	300x60	76.95
A0430065*	300x65	80.59
A0430075	300x75	92.72
A0430090	300x90	103.37
A0430120	300x120	185.61
A0430180	300x180	285.00
A0430240	300x240	344.40
A0433025*	330x25	56.79
A0433030*	330x30	60.27
A0433045*	330x45	73.07
A0433050*	330x50	77.22
A0433055*	330x55	80.88
A0433060*	330x60	83.74
A0433065*	330x65	87.77
A0433075*	330x75	100.31
A0433090*	330x90	111.79
A0433100	330x100	182.77
A0433120*	330x120	202.36
A0433180*	330x180	311.75
A0433240*	330x240	376.53

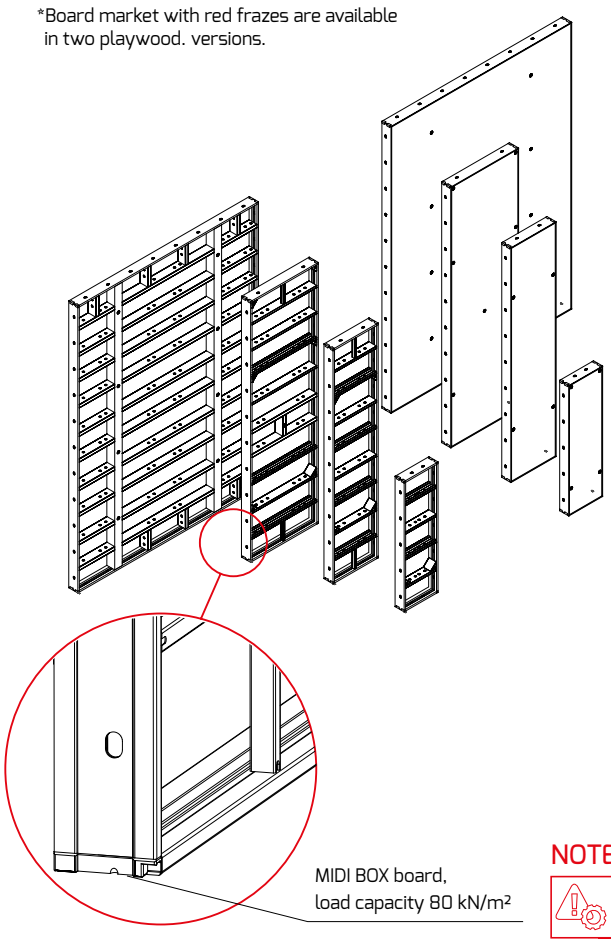

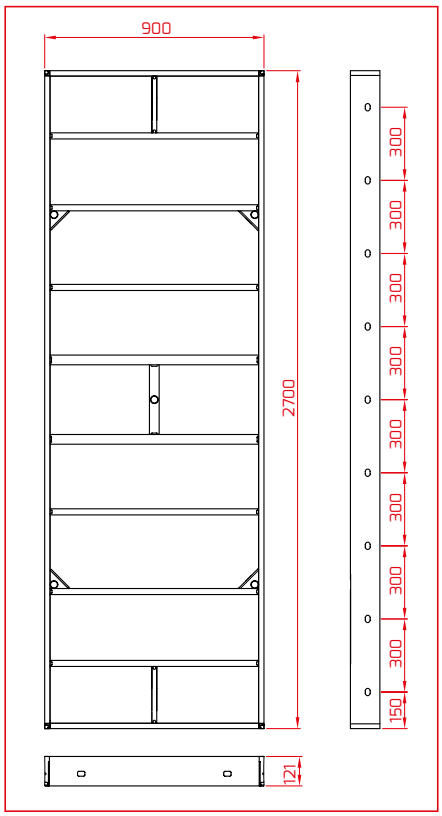

NOTE!

Bowstring hole spacing is determined in the assembly manual.

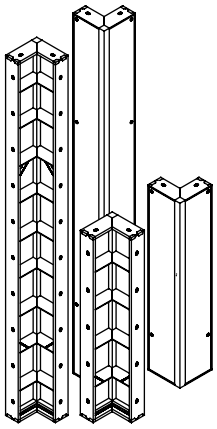

3. Internal corner

Used for boarding of the internal corners at a 90° angle.

Index	Dimensions (cm)	Weight (kg)
A0516090	90x30	23.88
A0516120	120x30	30.45
A0516150	150x30	37.98
A0516270	270x30	64.85
A0516300	300x30	84.20
A0516330	330x30	90.82

*Płyty zaznaczone czerwoną ramką występują w dwóch wersjach sklejki.

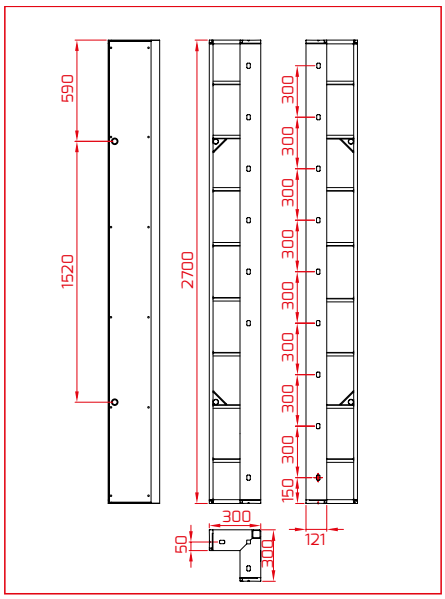

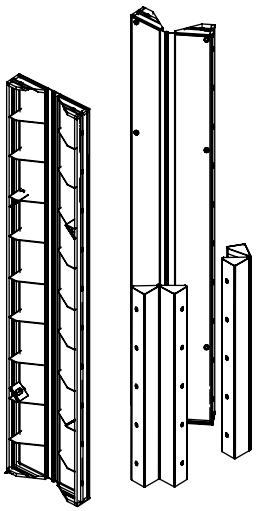

4. Hinged corner

Used for boarding of the internal and external corners at an angle of 60° up to 270° (for A0518...) and 90° up to 210° (for A0517...).

Index	Dimensions (cm)	Weight (kg)
A0517090	90x15	17.09
A0517120	120x15	22.34
A0517150	150x15	27.56
A0517270	270x15	48.54
A0517300	300x15	53.78
A0517330	330x15	58.80
A0518090	90x30	27.44
A0518120	120x30	35.34
A0518150	150x30	43.62
A0518270	270x30	75.24
A0518300	300x30	94.22
A0518330	330x30	102.74

*Board market with red frazes are available in two playwood. versions.

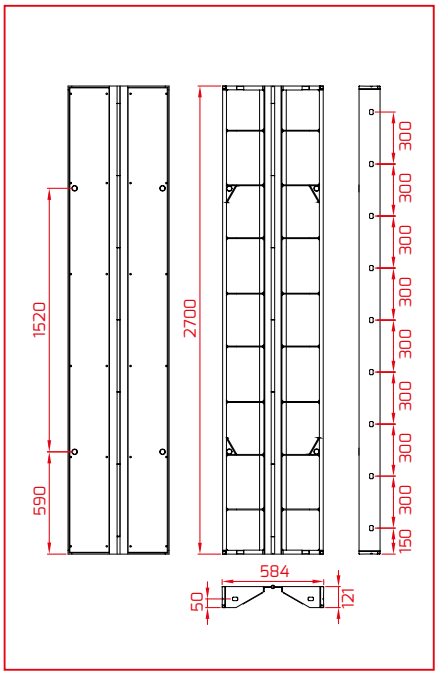

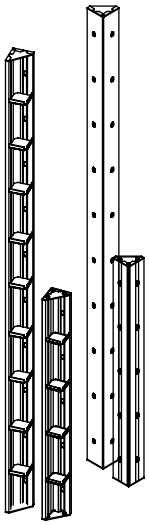

5. External corner

Used for fast shuttering board connecting in the rectangular external corners.

Index	Dimensions (cm)	Weight (kg)
A0515090	90x0	8.76
A0515120	120x0	11.60
A0515150	150x12	14.49
A0515270	270x12	25.83
A0515300	300x12	28.68
A0515330	330x12	31.49

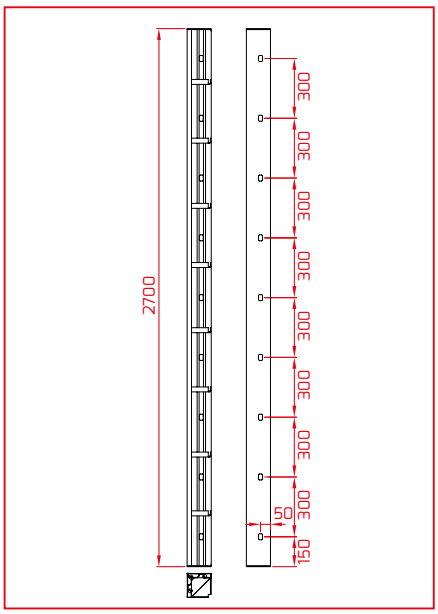

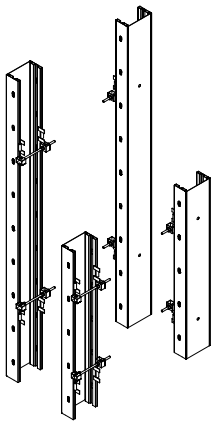

6. Radial slats

Used for boarding of the arched structures with a radius exceeding 2.5 m. We offer three radial slat widths: 15, 20 and 25 cm. The radial slats and the MIDI BOX boards allow for a precise formwork set-up without the need to use the filling inserts.

Index	Dimensions (cm)	Weight (kg)
A0715150	15x150	21.39
A0715270	15x270	35.35
A0715300	15x300	39.39
A0720150	20x150	22.82
A0720270	20x270	37.86
A0720300	20x300	42.05
A0725150	25x150	24.20
A0725270	25x270	40.26
A0725300	25x300	44.72

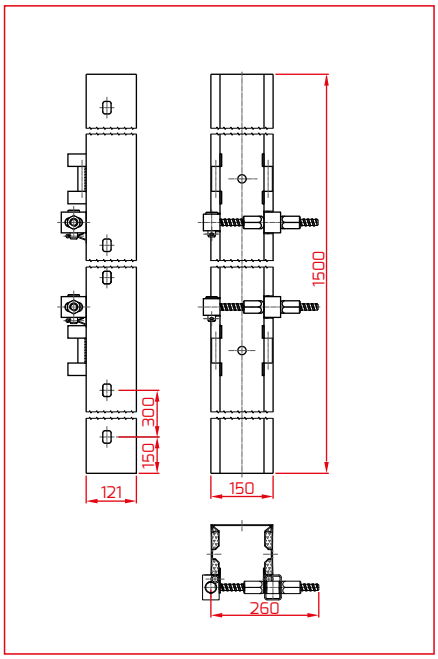

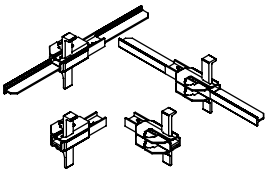

7. Formwork lock

BM multi-purpose formwork lock. It acts also as a straightening and stiffening element for the formwork.

Nazwa	Index	Dimensions (cm)	Weight (kg)
BM260	A0901260	L=26; B=5.7	4.64
BM710	A0902710	L=71; B=5.7	7.06

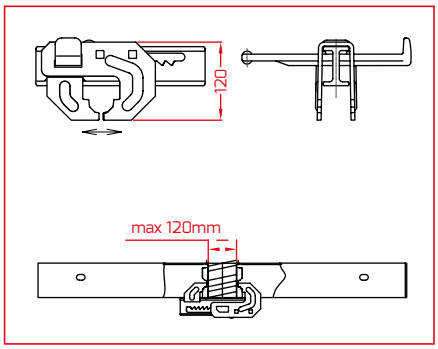

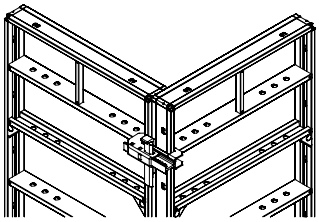

8. Corner formwork lock

A component to join the formwork boards at a right angle without the outer system corners (A0515...).

Index	Dimensions (cm)	Weight (kg)
A0903260	L=26	4.86

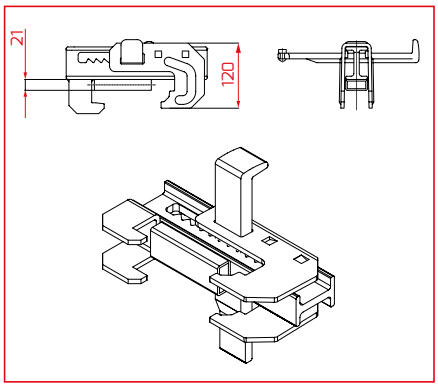

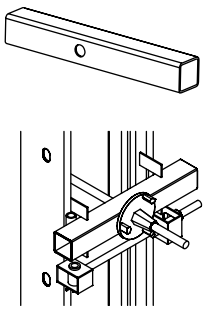

9. Bowstring beam

Transfers the load from the bowstring to the radial slats.

Index	Dimensions (cm)	Weight (kg)
A0730001	350x50	1.56

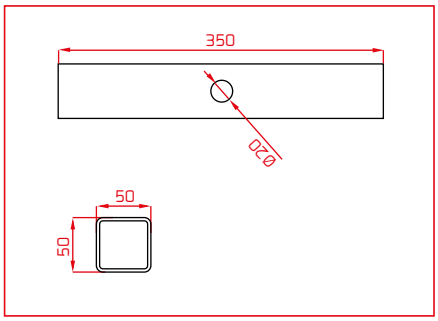

10. Tilting support

Used for plumbing the shuttering boards 1.5 m, 2.5 m and 3.0 m (this support does not transfer the forces generated by the concrete pressure).

Index	Height of the formwork – H [m]	Recommended support spacing [m]	Weight [kg]
A0904001	1.5÷3.0	3.0	28.88
A0904002	2.7÷6.0	3.0	40.20

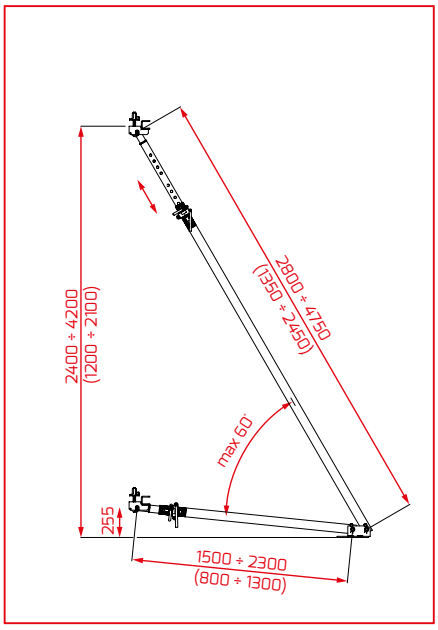

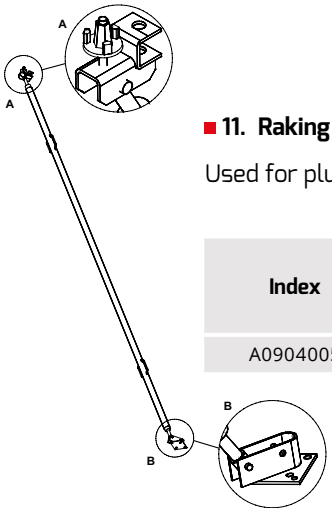

11. Raking shore

Used for plumbing the high wall formwork – i.e. higher than 3.0 m..

Index	Height of the formwork – H [m]	Recommended support spacing [m]	Weight [kg]
A0904005	4.5÷6.0	3.0	37.56

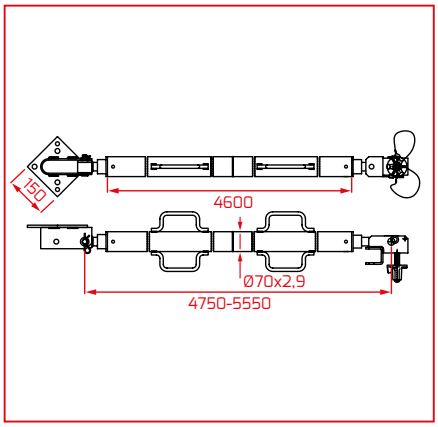

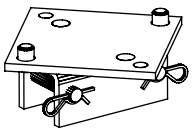

12. Tilting support handle

Used together with the climbing formwork bracket. Intended for fastening the tilting support and raking shore on the bracket.

Index	Weight [kg]
A0915005	3.78

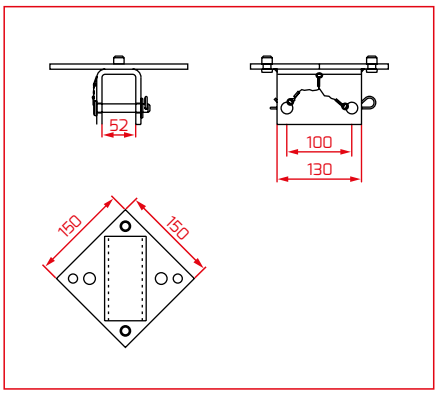

13.Prop head

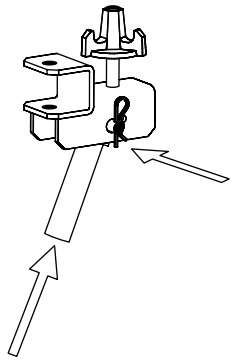

An element that connects the formwork supports with the shuttering boards among other things. The prop head is the integral part of: tilting support, raking shore and it is also available as the service part.

Index	Weight (kg)
A0904010	2.16

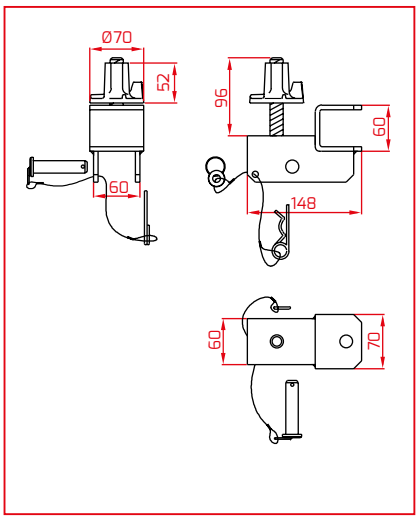

14. Prop link

Used for connecting the ceiling support with the formwork. A connector together with the support may be used as the tilting support. The set includes the prop head.

Index	Weight (kg)
A0904011	3.60

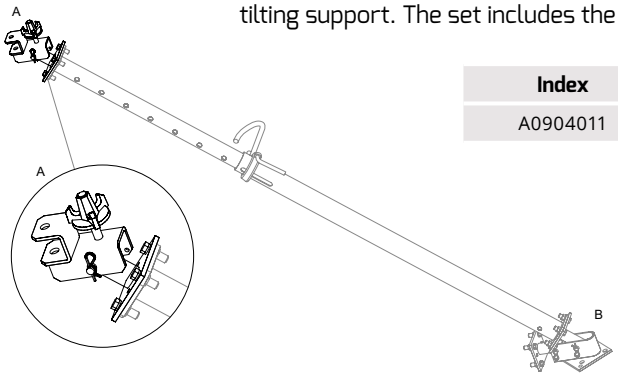

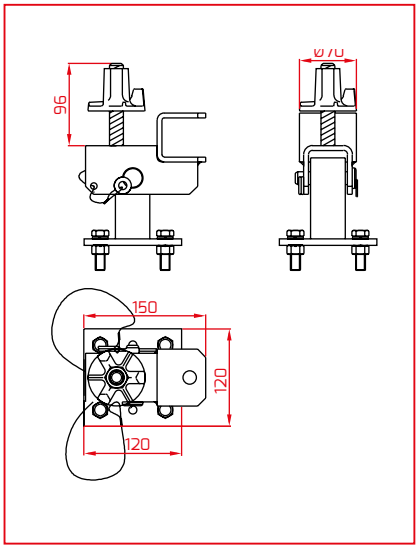

15. Support foot

Used for placing the support on the ground. The support foot together with the support is used as the tilting support.

Index	Dimensions (cm)	Weight (kg)
A0904012	9.90	5.54

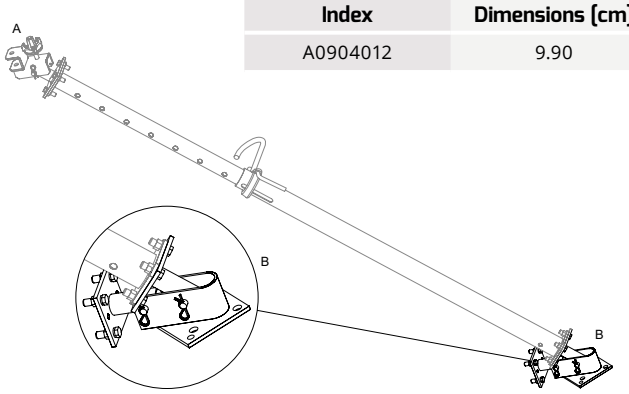

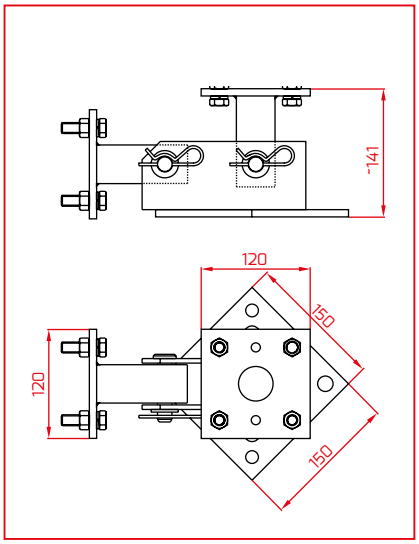

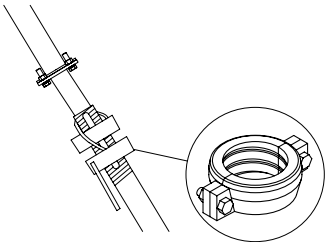

16. Locknut for support

Used for locking the ceiling support which together with the foot and prop link acts as the tilting support when the shuttering boards are plumbed. An element to be used with the A0004300-A0004550 supports.

Index	Dimensions (mm)	Weight (kg)
A0009064	Ø64	0.66
A0009076	Ø75	0.85

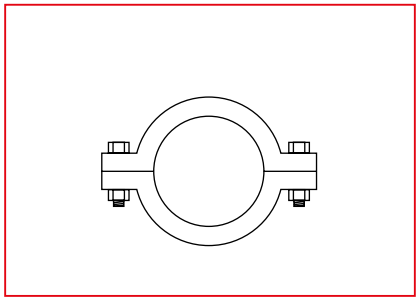

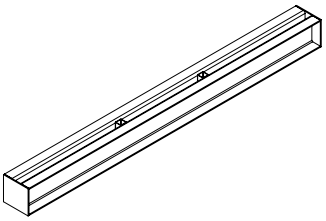

17. Stiffening beam

Intended for stiffening the connections of the shuttering boards and the filling inserts while keeping the formwork straight. An element to be used with the tightener and flange nuts.

Index	Dimensions (cm)	Weight (kg)
A0960001	L=125	14.77
A0960003	L=250	29.00

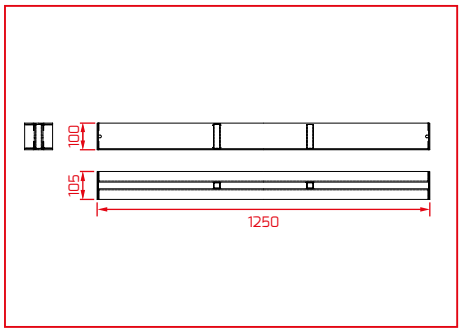

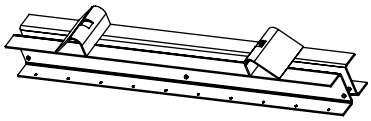

18. Boarding transom

Ensures the connection of the shuttering boards with the filling inserts more than 15 cm wide while keeping the connection straight and stiffened.

Index	Dimensions (cm)	Weight (kg)
A0970001	L=100	13.61

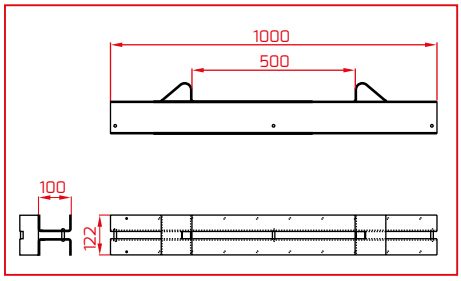

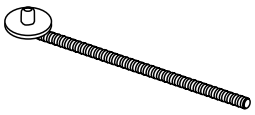

19. Tightener

A set includes two tighteners and a stiffening beam or tightening transom.

Index	Dimensions (cm)	Weight (kg)
A0920001	L=30	0.85

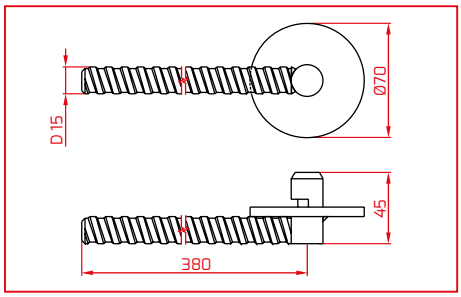

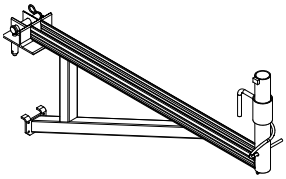

see p. 22

20. Working platform bracket

Attached to the shuttering board holes, acts as a convenient base for laying the working platforms.

Index	Dimensions (cm)	Weight (kg)
A0951000	L=96	10.70

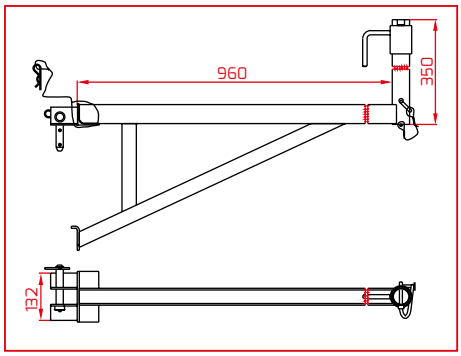

21. Working platform post

Inserted into the working platform bracket holes. Used for fastening the wooden railings to protect workers on the working platforms. It also allows for connecting the shuttering boards on the formwork outside edges.

Index	Dimensions (cm)	Weight (kg)
A0970002	L=108.50	2.89

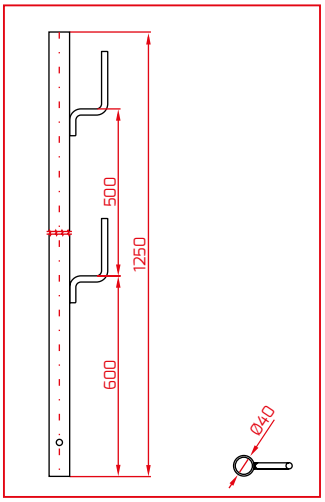

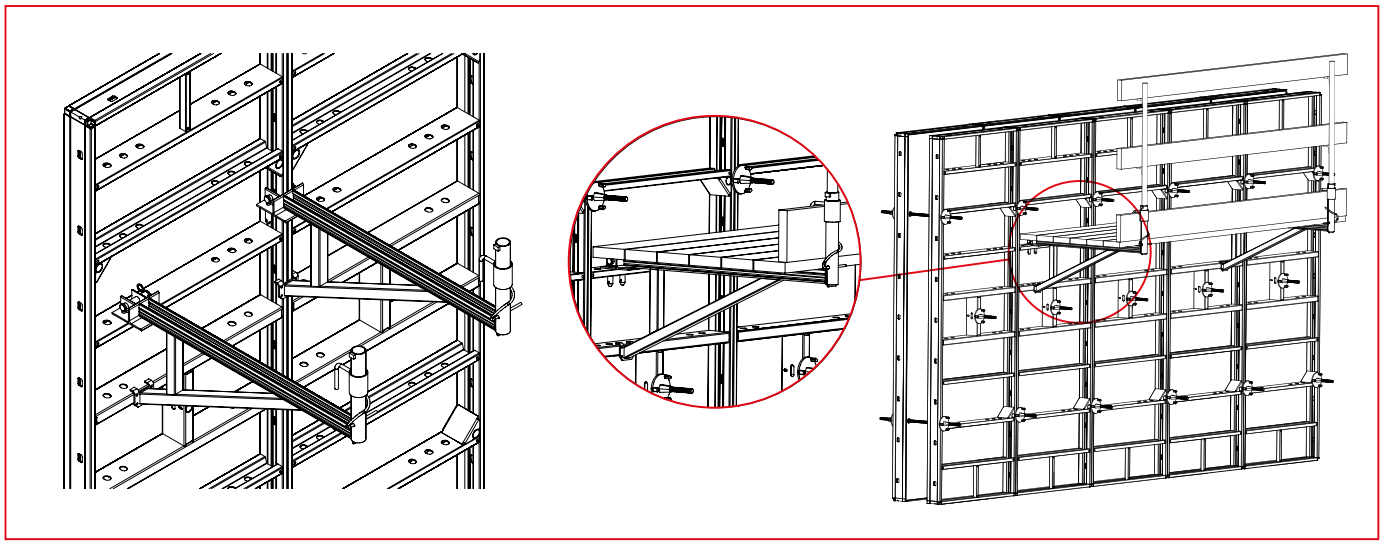

Diagram – working platform assembly

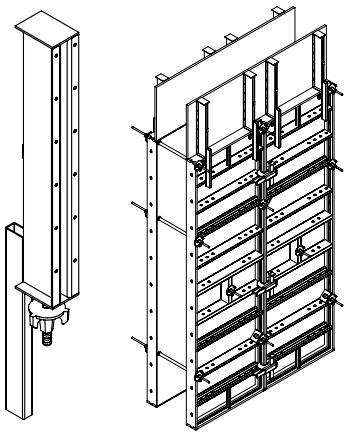

22. Superstructure bracket

The superstructure bracket 0.6 m is an element that works with all shuttering system of the MIDI BOX system. Together with the appropriately cut format of e.g. plywood it allows to concrete fill the walls max. 0.6 m higher.

Index	Dimensions (cm)	Weight (kg)
A0603600	L=60	5.98

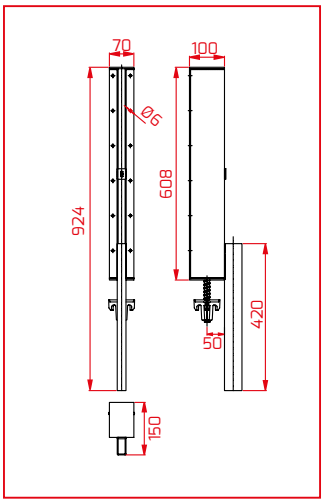

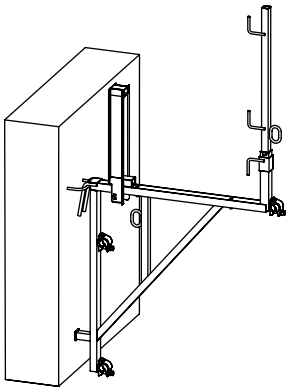

23. Wall bracket

Fastened to the board structure, used for fastening the working platforms on the existing walls and supporting the climbing formwork. The bracket is installed on the anchoring elements concreted in the wall.

Index	Dimensions (cm)	Weight (kg)
A0950000	L=100 H=220	29.20

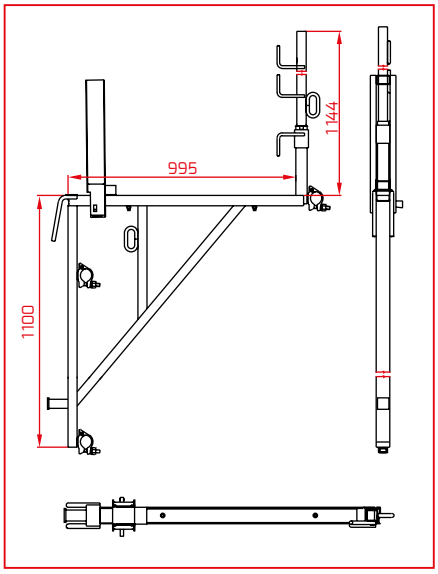

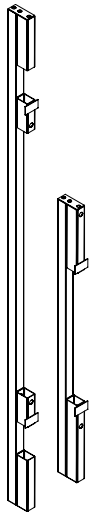

24. Steel filling inserts

As well as the wooden inserts the steel inserts are used for compensating the formwork dimensions by the multiple of 5 cm.

Index	Dimensions (cm)	Weight (kg)
A0605150	150x12x5	9.66
A0605270	270x12x5	14.11
A0605300	300x12x5	13.66
A0605330	330x12x5	15.27

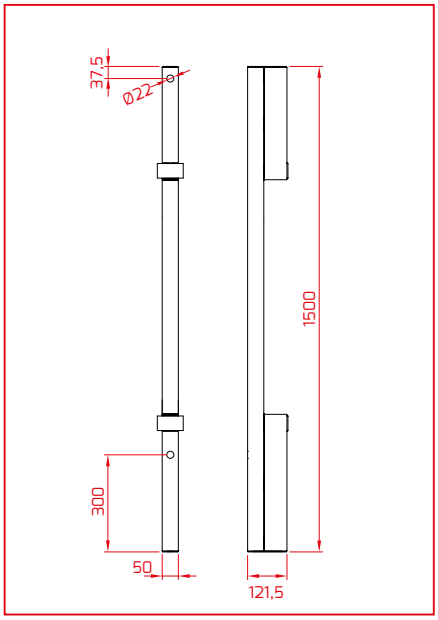

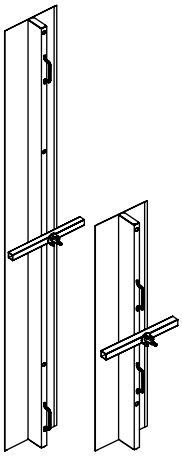

25. Adjustable filling inserts

Adjustable filling inserts

Index	Dimensions (cm)	Weight (kg)
A0636150	36x150	29.00
A0636270	36x270	49.30
A0636300	36x300	54.40
A0636330	36x330	59.70

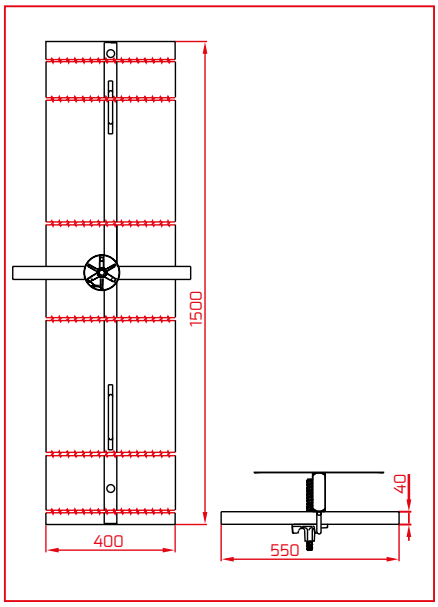

2. CLIMBING FORMWORK

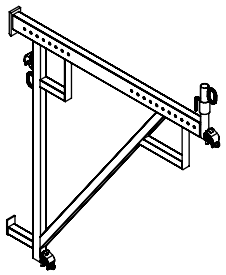

26. Climbing formwork bracket

Intended for supporting the climbing formwork. Next brackets are fixed to the wall with the bracket grip and anchoring elements. Maximum spacing 1.35 m.

Index	Dimensions (cm)	Weight (kg)
A0915003	L=160 H=180	40.9

see p. 9

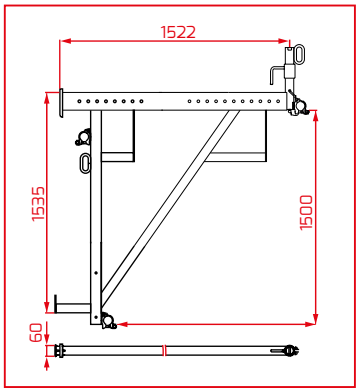

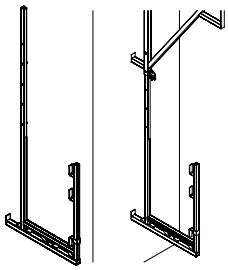

27. Additional platform bracket

An element used together with the climbing formwork bracket. It is used for the removal of the bracket grip and the SKK cone which fasten the climbing formwork bracket on the lowest level.

Index	Dimensions (cm)	Weight (kg)
A0952000	L=101 H=280	27.9

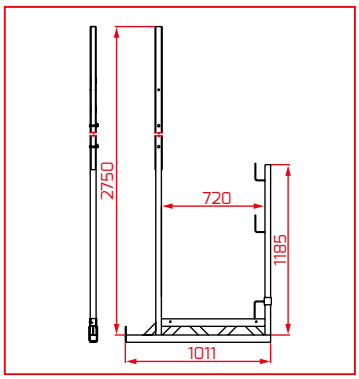

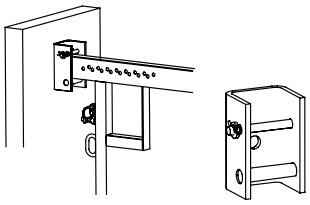

28. Bracket grip

Used together with the climbing formwork bracket. Allows installation of the bracket on the wall.

Index	Dimensions (cm)
A0915004	4.86

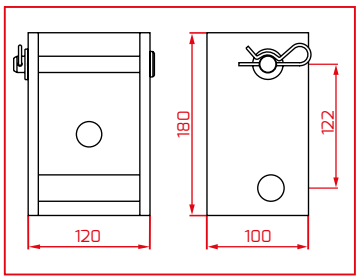

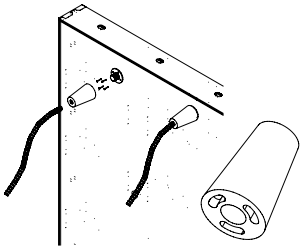

29. SKK cone

Used for connecting the BETOMAX B15 bowstring on one side and the threaded rod on the other side or the screw with the M24 metric thread.

Index	Dimensions (cm)	Weight (kg)
A2545030	B15/M24	1.27

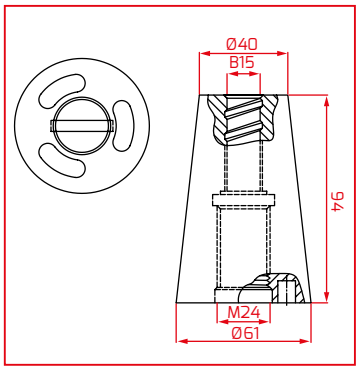

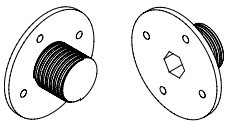

30. SKK cone grip

Used for fixing the SKK BETOMAX cone. The grip is nailed to the formwork in any manner.

Index	Weight (kg)
A2545040	0.10

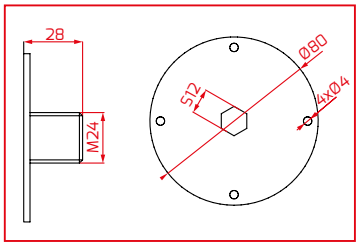

Component manufacturer

Climbing formwork supplementary elements

- standard pipes E4405xx-E440560
- rotary couplings E581319
- longitudinal couplings E581419
- hook, waved, anchoring D15 anchors
- screws M24x45
- SKK cone key

3. POLE FORMWORK (standard for poles and walls)

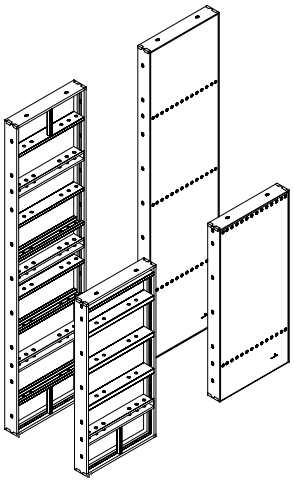

31. SP shuttering board

Apart from the basic shuttering board function it also allows for the boarding of the square and rectangular poles up to 5.4 m high in the module every 5 cm with the 55 x 55 cm section for the SP70 boards and 75 x 75 cm for the SP90 boards.

Index	Dimensions (cm)	Weight (kg)
A0306070	60x70	24.53
A0309070	90x70	34.20
A0312070	120x70	41.49
A0315070	150x70	52.50
A0315090	150x90	64.95
A0327070	270x70	82.38
A0327090	270x90	111.34
A0330070	300x70	92.91
A0330090	300x90	125.85
A0333070	330x70	92.91
A0333075	330x75	103.43
A0333090	330x90	133.17

*Board market with red frazes are available in two playwood versions.

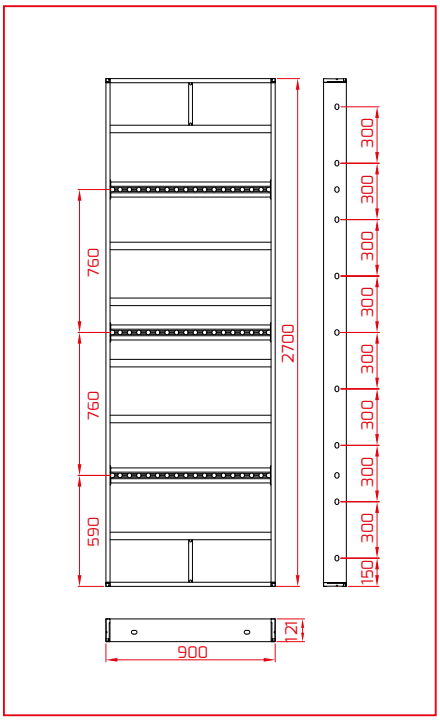

NOTE!

Bowstring hole spacing is determined in the assembly manual.

32. Formwork bowstring

With the DYWIDAG hot rolled thread, black or galvanised. The bowstring length may be specified by the client but they cannot be longer than 600 cm. Permissible load: 90 kN.

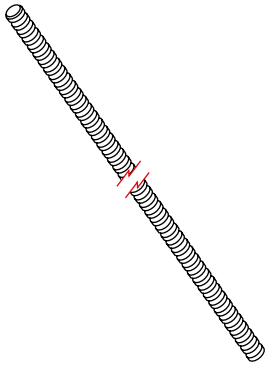

Index	Dimensions (cm)	Weight (kg)
A0815075	15x75	1.08
A0815100	15x100	1.43
A0815120	15x120	1.72
A0815130	15x130	1.87
A0815150	15x150	2.10
A0815175	15x175	2.50
A0815200	15x200	2.86
A0815250	15x250	3.58
A0815300	15x300	4.20

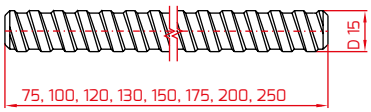

33. SP bolt

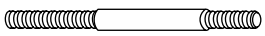

Used together with the SP nut to connect the SP shuttering boards.

Index	Dimensions (cm)	Weight (kg)
A2550000	Ø15x295	0.70

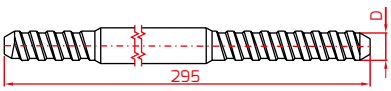

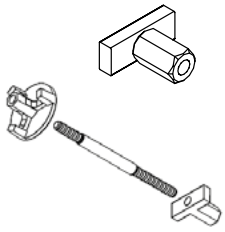

34. SP special nut

Used together with the SP bolt to connect the SP shuttering boards.

Index	Dimensions (cm)	Weight (kg)
A2535000	30x80x65	0.50

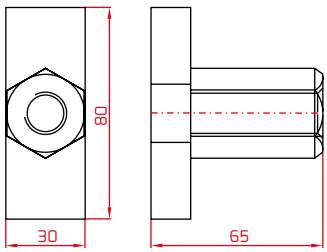

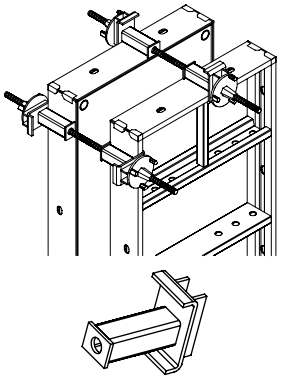

35. Edge catch

Allows for connecting the shuttering boards by their outside edges. Used with the formwork bowstring and the flange nuts.

Index	Dimensions (cm)	Weight (kg)
A0910001	L=12	1.23

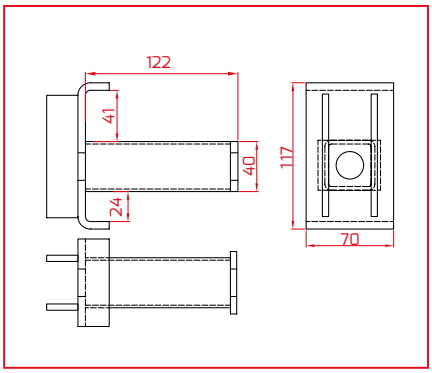

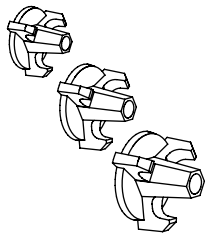

36. Flange nut

A basic element that works together with the DYWIDAG formwork bowstring and is used for connecting the MIDI BOX elements. Permissible load is 90 kN.

Index	Dimensions (mm)	Weight (kg)
A2510070	Ø70	0.40
A2510100	Ø100	0.60
A2510110	Ø110	0.80

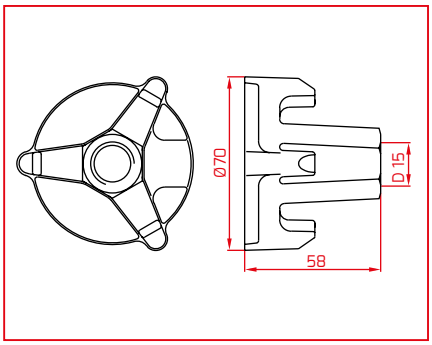

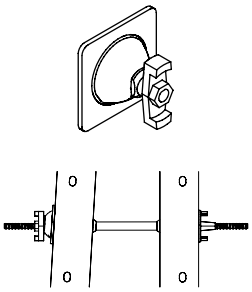

37. Square nut with ball socket

Self-adjustable within 15°. Permissible load – 90 kN. Works together with the formwork bowstring.

Index	Dimensions (cm)	Weight (kg)
A2530120	12x12	1.40

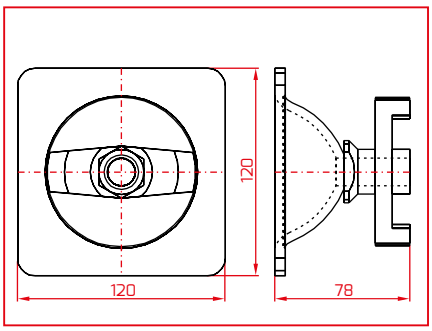

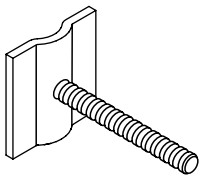

38. Centring bowstring

A bowstring with the DYWIDAG hot rolled and galvanised thread. Used for connecting the hinge corner 15 cm wide with the shuttering board. It can be used for connecting the shuttering boards through the oval holes in their side edges.

Index	Dimensions (cm)	Weight (kg)
A0815000	L=200	0.93
A0815001	L=120	0.77

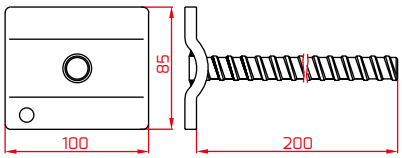

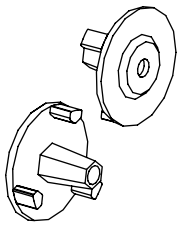

39. Centring nut

Included in the set with the centring bowstring.

Index	Dimensions (mm)	Weight (kg)
A2532100	Ø100	0.60

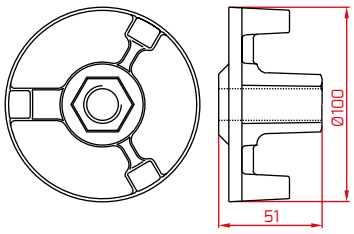

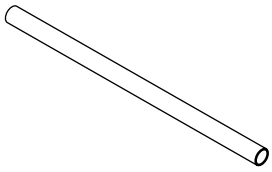

40. PVC distance pipe Ø26 mm

A pipe with the outer diameter of O26 mm and inner diameter of Ø22 mm; offered in sections 2.8 m long; can be cut between the formwork sides to the desired length on the construction site. Acts as a "spacer" and allows for removing the bowstring after concreting of the wall (lost element)

Index	Dimensions (mm)	Weight (kg)
A2540015	Ø26	0.20 kg/m.b.

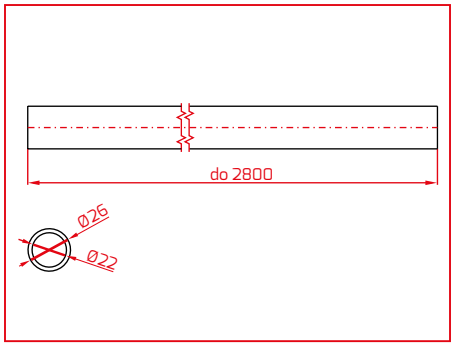

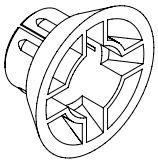

41. D15 PVC sealing cone

Protects the bowstring against concreting at the shuttering board plane.

Index	Dimensions (mm)	Weight (kg)
A2545015	Ø22	0.01

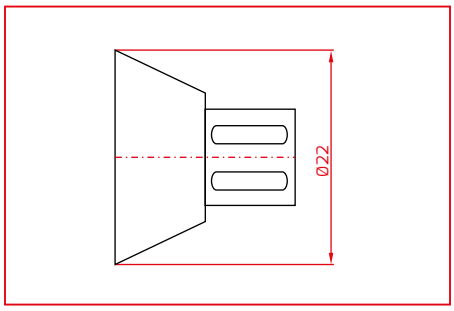

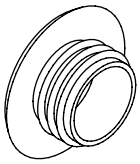

42. Hole plug

Used for closing the free (not used) holes in the shuttering boards. The hole plugs differ due to their application with the appropriate holes.

Application	Index	Dimensions (mm)	Weight (kg)
MIDI BOX boards	A2565001	Ø24 / Ø45	0.01
SP boards	A2565003	Ø25 / Ø28	0.01
oval holes	A2565004	Ø20 / 27x32	0.01
MIDI BOX boards	A2565002	Ø29 / Ø44	0.01

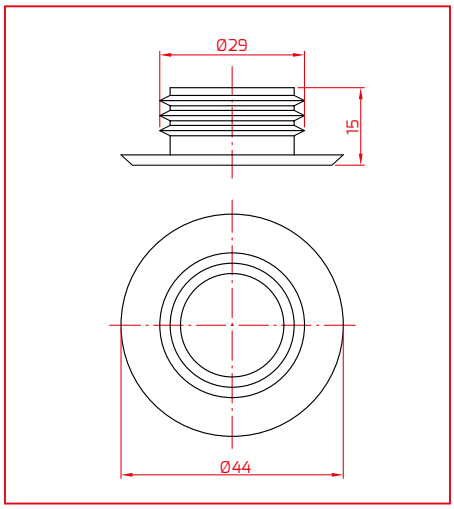

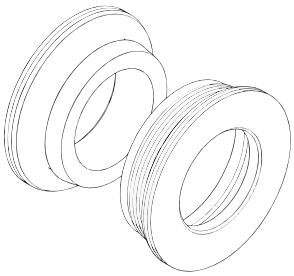

43. Split sleeve

Used for filling the process holes made in the plywood and used for threading the threaded Dywidag D15 rods (bowstrings) that connect the opposite formwork walls. When the tightening element is not used in the given board area the space of the given process hole is closed with the special hole plug. The type of the hole plug depends on the type of the board.

Index	Dimensions (mm)	Weight (kg)
A2565000	Ø42x13	0.01
A2565005	Ø40/Ø23/Ø35	0.01

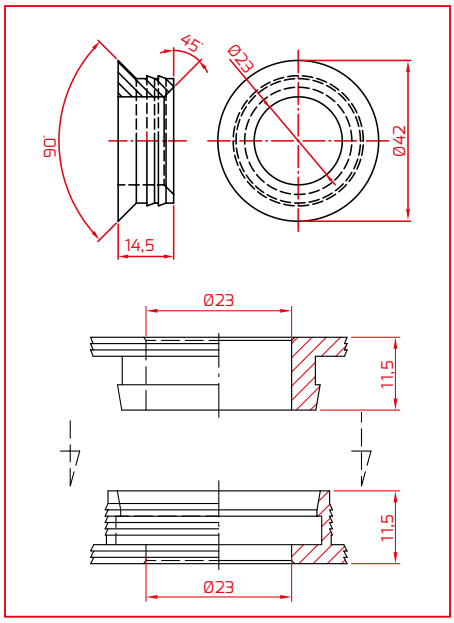

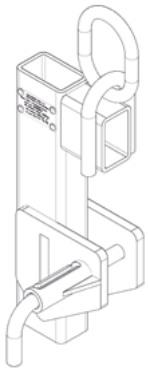

44. Hoisting hook

An element for transporting a set of shuttering boards. Use two pieces. Permissible working load - 1000 kg.

Index	Dimensions (cm)	Weight (kg)
A0908001	L=43	9.10

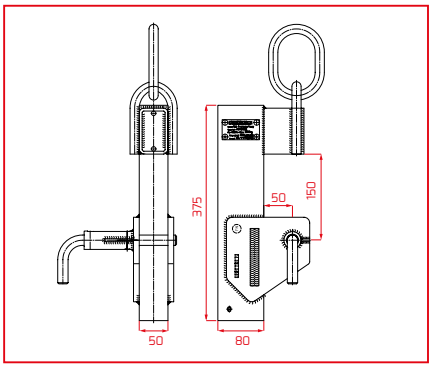

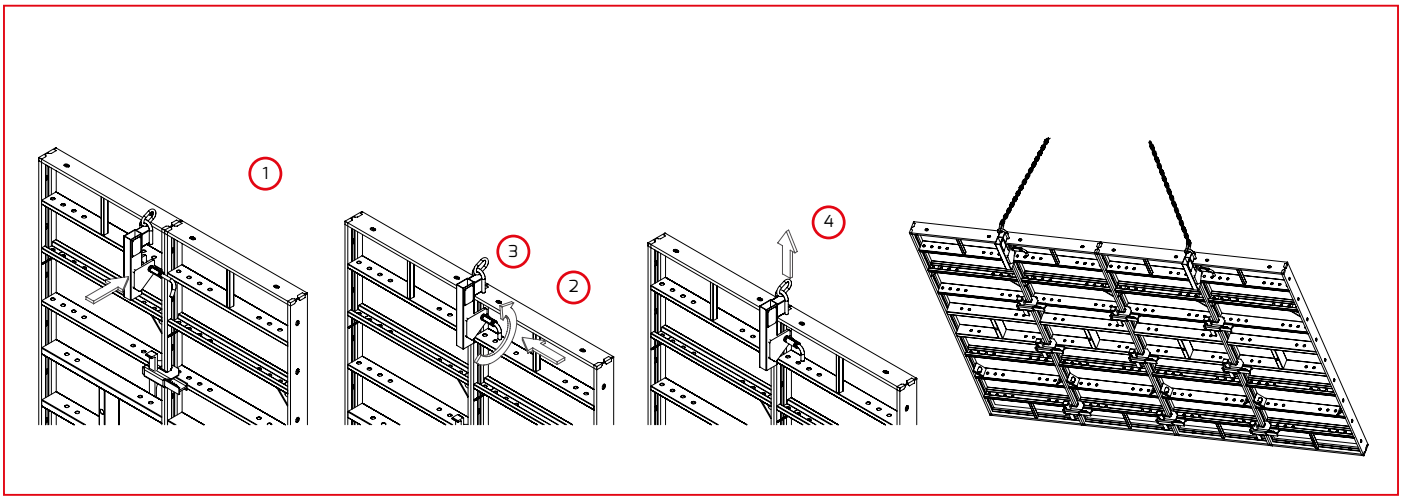

Lifting sling – sample assembly

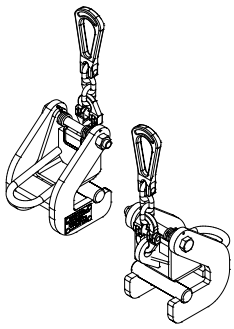

45. Lifting sling

Used for transporting the individual boards. Maximum lifting capacity – 800 kg.

Index	Dimensions (cm)	Weight (kg)
A0909001	L=15	6.40

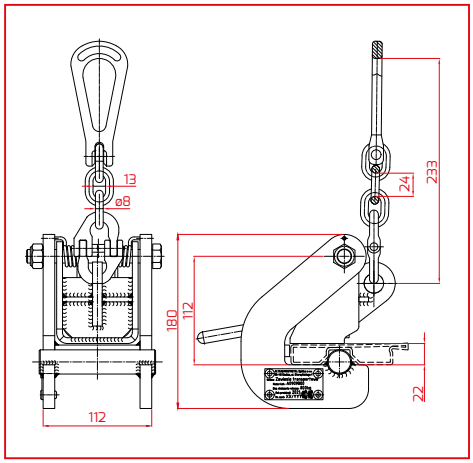

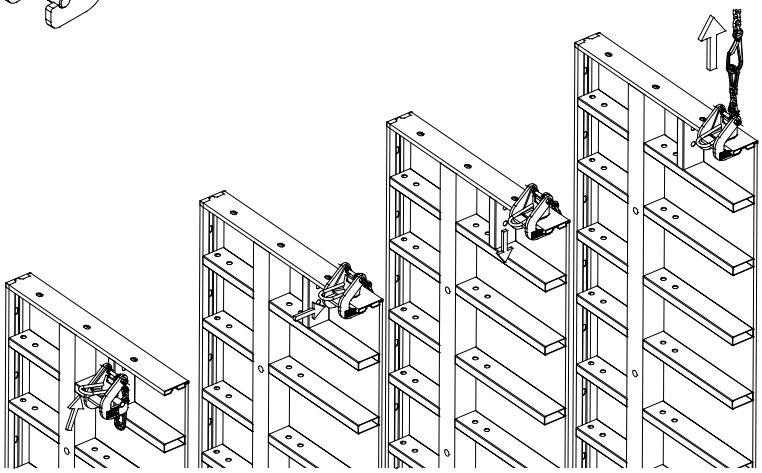

Lifting sling – application

46. Formwork removing element

A formwork removing element works together with the MIDI BOX wall formwork system. It allows for the disassembly of the whole formwork internal section without the need to completely disassemble the set. The formwork removing mechanism reduces the formwork size by 5 cm. The clearance obtained allows for the free removal of the segment.

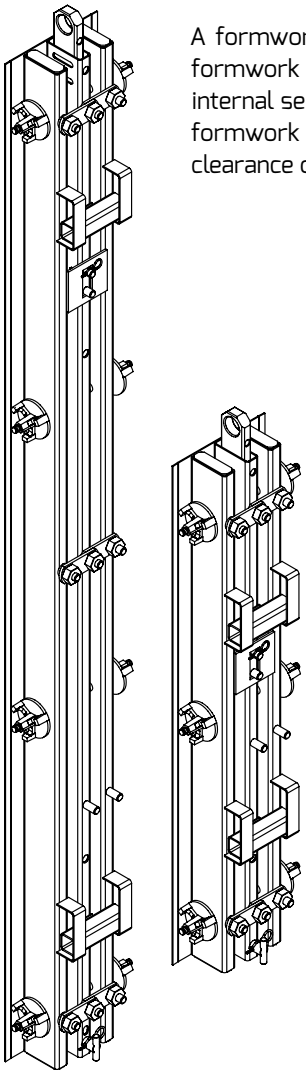

Index	Dimensions (cm)	Weight (kg)
A0640150	20x150	73.18
A0640270	20x270	120.93
A0640300	20x300	131.92
A0640330	20x330	143.24

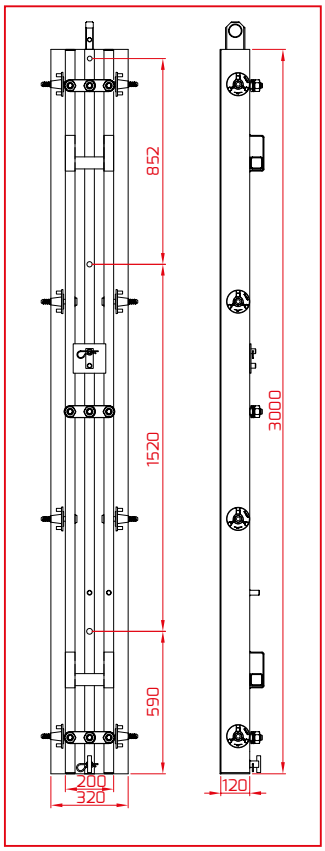

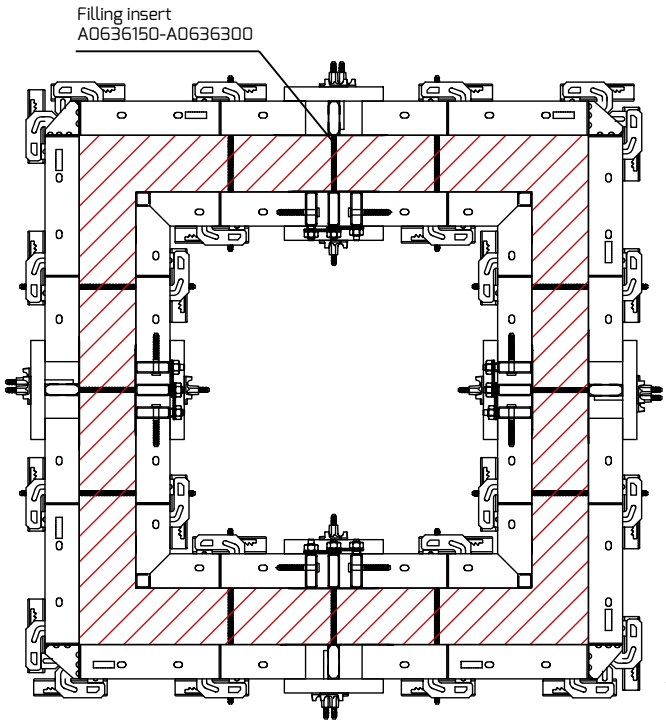

see p. 10-11

Example of the whole lift shaft formwork set positioning.

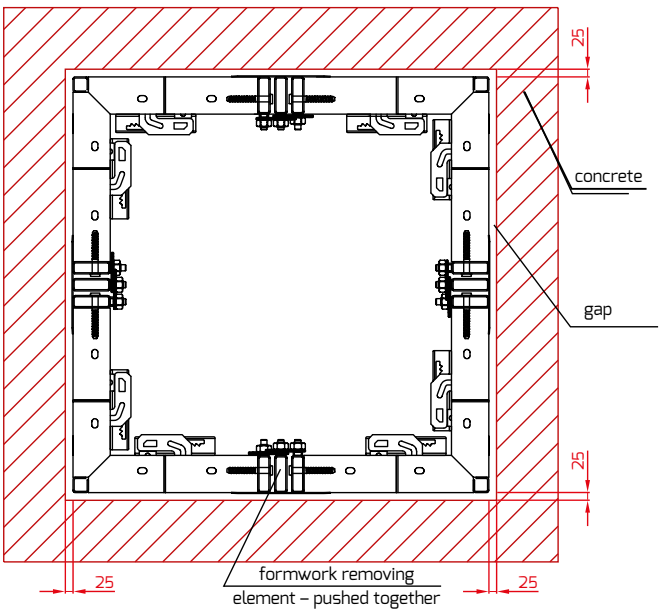

The moment the formwork is disassembled when the concrete is dry

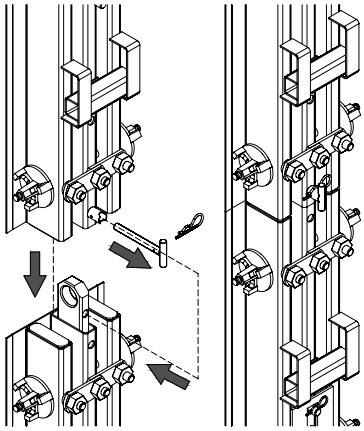

Joining formwork removing elements

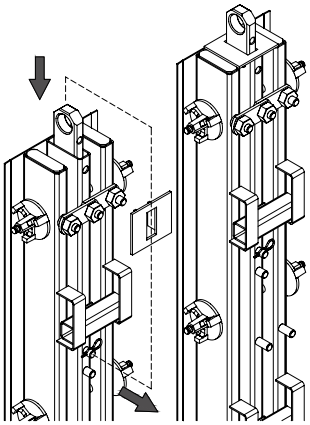

Installing the cap for concrete pouring

5. SUPPORTING TRESTLES (FOR ONE-SIDED FORMWORK)

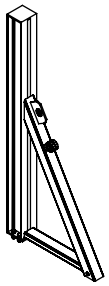

47. A type trestle bracket

An element 1.6 m high that works with the B type trestle bracket (a0995002) and allows to support the one-sided formwork up to the height of 4.5 m with the fresh concrete pressure of 100 kN/m².

Index	Dimensions (cm)	Weight (kg)
A0995001	L=56; H=160	48.70

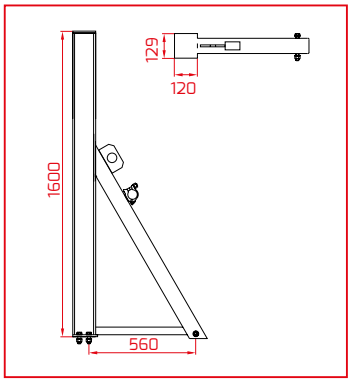

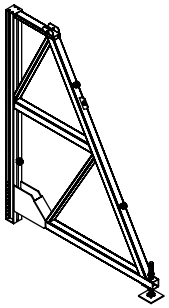

48. B type trestle bracket

An element 2.9 m high used for supporting the one-sided formwork used for concreting the walls located at the existing buildings, rocks etc. The structure must be appropriately anchored in the ground. When the formwork is more than 2.9 m high it works together with the A type trestle bracket (A0995001).

Index	Dimensions (cm)	Weight (kg)
A0995002	L=220; H=290	227.20

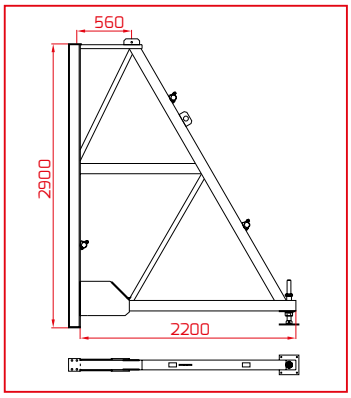

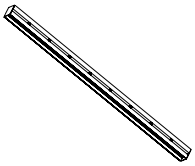

49. Clamping beam

An element used for clamping the trestle brackets. It transfers the vertical force generated by the concrete pressing on the anchors.

Index	Dimensions (cm)	Weight (kg)
A0996260	L=260	57.35

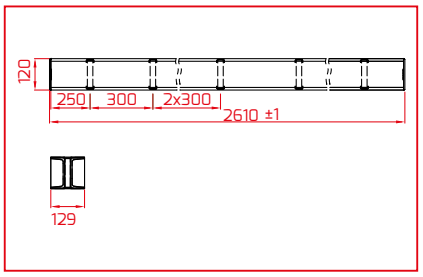

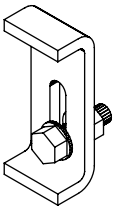

50. Angle bracket

An element used for locating the shuttering board in relation to the trestle bracket. It protects the board from moving under its own weight.

Index	Weight (kg)
A0997001	0.44

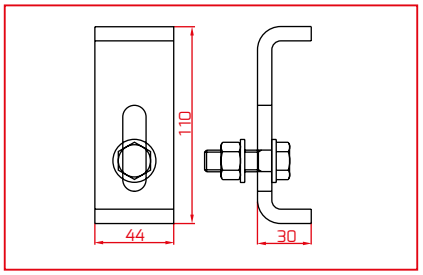

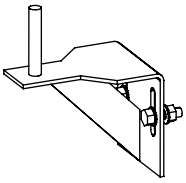

51. Wide angle bracket

An element used for locating the shuttering board in relation to the trestle bracket while working together with the stiffening beam. It protects the board from moving under its own weight.

Index	Weight (kg)
A0997002	2.70

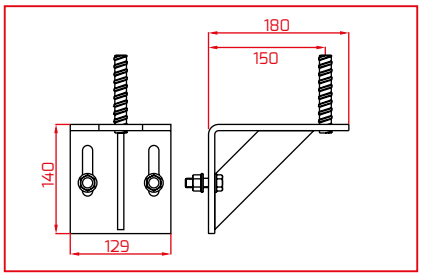

One-sided formwork supplementary elements

- Rotary couplings
- Shuttering boards
- V handles
- Hexagonal nuts
- Waved, hook and anchoring anchors

Component manufacturer

- Tightener A092001
- Flange nuts A2510070-A2510110
- Stiffening beams A0960001; A0960003
- Formwork bowstrings A0815075-A0815300
- Standard pipes E440510-E440560

II CEILING FORMWORK – INTRODUCTION

The ceiling systems offered by ALTRAD-MOSTOSTAL include:

- supports, girders and plywood to install the conventional ceiling,
- ALUstrop system boards,
- supporting towers.

They feature a modern design, safe usage, quick installation and competitive price.

The ceiling formwork as well as its additional elements meet the strictest domestic standards and European requirements while presenting the top European quality.

The company conducts the constant quality control on each stage of the production, holds the implemented ISO 9001:2009 procedures, SLV welding authorisation regarding the steel and aluminium products.

SYSTEM ADVANTAGES:

Precise and assembly are guaranteed by:
- single assembly scheme (for the ceiling up to 30 cm thick),
- simple releasing-formwork removing-ceiling support mechanism,
- durable elements made of high quality materials,
- smooth surfaces which do not require luting,
- high load capacity.

1. STANDARD CEILING SYSTEM

CONVENTIONAL CEILING:
Its basic elements include the steel supports and wooden girders. The height of the supports can be adjusted within 1482 mm up to 5500 mm. We offer the girders of the following lengths: 1800 mm up to 5900 mm.

The ceiling boards are made of the anticorrosive hot dip galvanised pipes. This anticorrosive protection guarantees high weatherproofness of the supports.

The durability of the wooden girders is ensured by impregnation (they are produced by the leading global producers).

FEATURES OF THE CEILING FORMWORK:

- easy assembly,
- safe work,
- small amount of time consumed,
- multiple use of the formwork set,
- economical solution.

Heads and girders are an important element of the conventional ceiling: the head fork spacing allows for safe installation of one girder and when the head is rotated 90° – two girders. This system allows to connect the girders to obtain the sections of any length without the need to use additional supports. The head is assembled on the support by inserting the head pin into the support top.

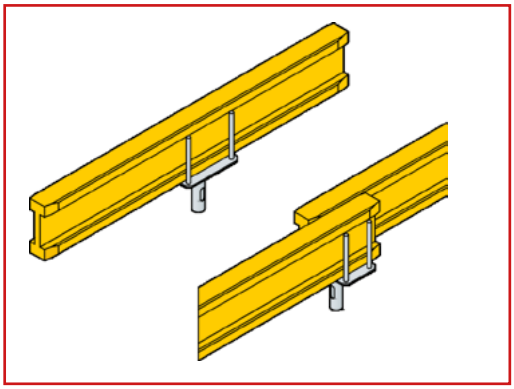

Girders on the cross head – diagram

The wooden formwork girder is glued with special resins for construction joints and the entire element is impregnated with a formulation which has a guaranteed efficacy outside – min. 5 years and inside – min. 20 years.

The shape of the G-hook in the offered A0004... supports allows for fast ceiling formwork removal by reducing the height of the support by 3 mm and for an efficient disassembly. When removing the formwork the G-hook is turned upwards by a single hammer blow. The support pin is lowered and the finished ceiling pressure is reduced.
Then you can slightly lower the support pin by using the L-hook. As regards the A0006... supports the support height is reduced by lowering the support pin with the L-hook.

One full turn (360°) of the nut lowers or raises the formwork by 1 cm. The ceiling supports allow for immediate positioning not only of the horizontal ceilings but also of all surfaces designed with slopes in various directions.

In practice, the supports can be used on the construction site not only in the formwork system but also they are indispensable in supporting the lintels, beams, binders, balconies, TERIVA and ACKERMAN ceilings.

The ceiling supports are the basic element of the conventional ceiling formwork system and ALUstrop.

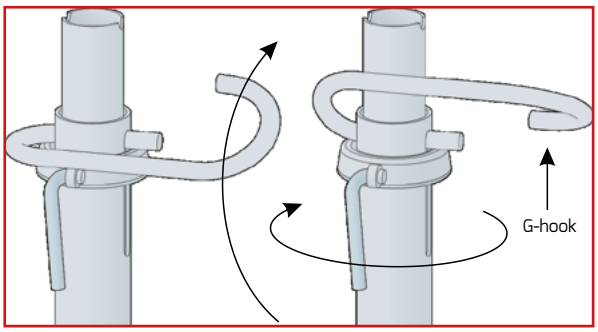

Sequence of operations when unloading the support with the G-hook

The height at which the supports can be extended may be adjusted to a great extent. The adjustment includes two phases:

a. in steps of 10 cm by fitting the G-hook in the support pin at the desired height;

b. precise adjustment – within 10 cm, by turning the nut on the support pin you can precisely, with the millimetre accuracy, level the ceiling surface.

A tripod for the supports is another common element of the conventional ceiling formwork system and ALUstrop. It acts as a protection against falling of the support during its positioning. However, the support and the tripod are independent elements. When one support is installed the tripod can be repositioned to the next support. Each leg of the tripod can be positioned at any angle which facilitates and makes it possible to work with the tripod even in narrow rooms, at the walls, corners.

The support is fastened to the tripod with a special sliding lock to immediately connect or disconnect the elements without any need to screw them. It is recommended to position the tripods at least at a ratio of 1:3 in relation to the number of supports.

As regards the EHS, the following posts are an important and necessary formwork system element: railing posts, corner railing posts and standard railing posts. They are used as a protective barriers during the construction.

The posts are accompanied by the planks located in the sockets of these posts which act as the protective railings. Depending on your needs the post design allows to fasten it on the ceiling edge or the ceiling formwork structure.

The offer of ALTRAD-MOSTOSTAL includes three types of posts which allow for the selection of the optimal number of posts for the given construction project.

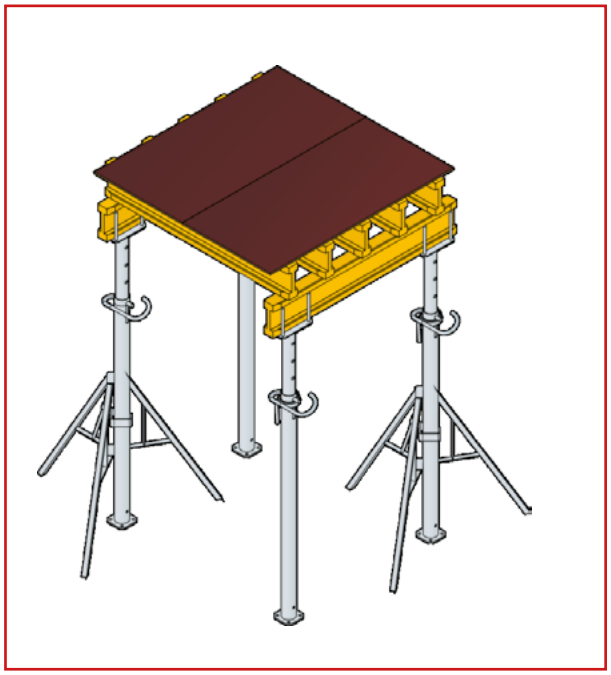

Tripod application – diagram

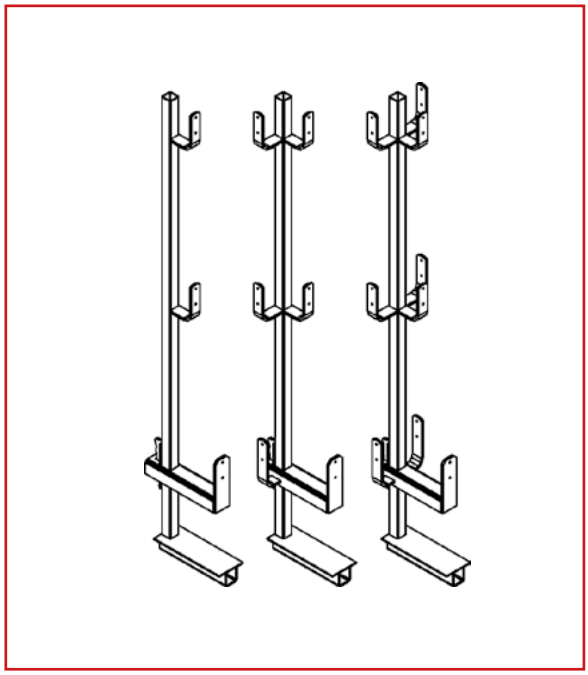

Posts – three types

2. ALUstrop – ALUMINIUM CEILING FORMWORK

The basic element of the ALUstrop formwork structure is the aluminium and plywood board with various dimensions. A wide range of dimensions supplemented by the expandable shuttering boards guarantees that the set will fit each ceiling. The gaps obtained may be filled with the expandable boards, compensating and transverse girders and the square timbers. The boards may be supported with the construction supports fitted with the supporting heads. The maximum ceiling thickness is 50 cm. The longitudinal and transverse girders which are the ALUstrop system components are used for boarding of the places where the reinforced concrete posts of the building structures are installed.

The innovative shape of the framing profiles in the plywood assembly zone facilities silicone preservation in the gap between the profile and the plywood while allowing for draining the concrete wash leaking from the boar connection zone an keeping the profile side surfaces clean.

ALUstrop features:

A
L
U
S
T
R
O
P

- attractive pricing (economical with ceilings exceeding 100 m²)
- light structure
- easier transportation and storage (owing to the light structure)
- efficient assembly and disassembly – approx. 0,2 h/m²; when compared to the conventional ceiling – approx. 0.55 h/m²
- durable elements (they are made of the weatherproof materials)
- equipment cycling on the construction site
- appropriate smoothness of the surface obtained
- pleasant boarding and formwork removal.

The ALUstrop system is supplemented by the expandable shuttering board which opposite to the normal aluminium shuttering board can be adjusted within 55 cm up to 90 cm.

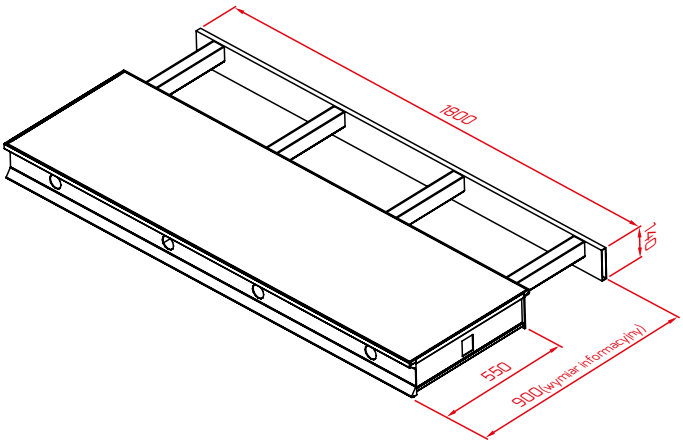

3. POLE FORMWORK – STANDARD FOR POLES AND WALLS

The tower structure includes the steel frames with the support spacing of 1.0 x 1.0 and with the height increased in 0.5 m increments. Stepless tower height adjustment is made according to your needs by changing the footings and adjustable head expansion length.

The tower stiffness in both perpendicular directions is ensured by the base frames and the vertical bracings that stiffen the next frames. The frames may be rotated 90° during the assembly.

Please remember that the bracings merge the structure into an inseparable piece which is particularly important in the case of vertical tower transportation where the construction cranes are used.

The supporting tower is used during:

- boarding of the monolithic building structures,
- supporting the prefabricated elements of the building structures,
- erecting the supporting structures for the working platforms,
- erecting the protective platforms.

All components of the S10 supporting tower are galvanised.

For tower	Position height (m)	Permissible load per stand (kN)	
		Without wind load	With wind load
not fastened at the top	5.50	52.0	43.0
	7.50	51.6	41.0
fastened at the top	5.50	53.0	52.4
	7.50	53.0	51.0
	12.50	52.4	48.0
	20.00	50.4	please consult the producer

S10 tower load capacity table

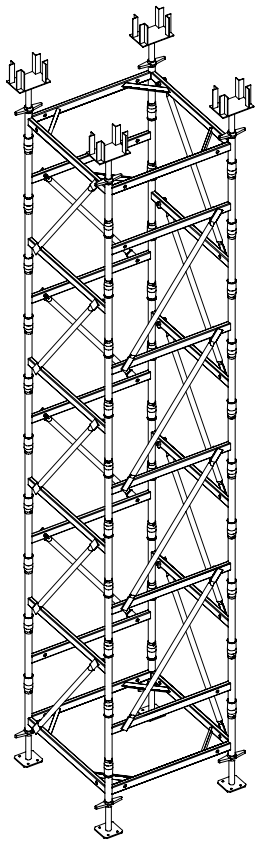

S10 supporting tower – diagram

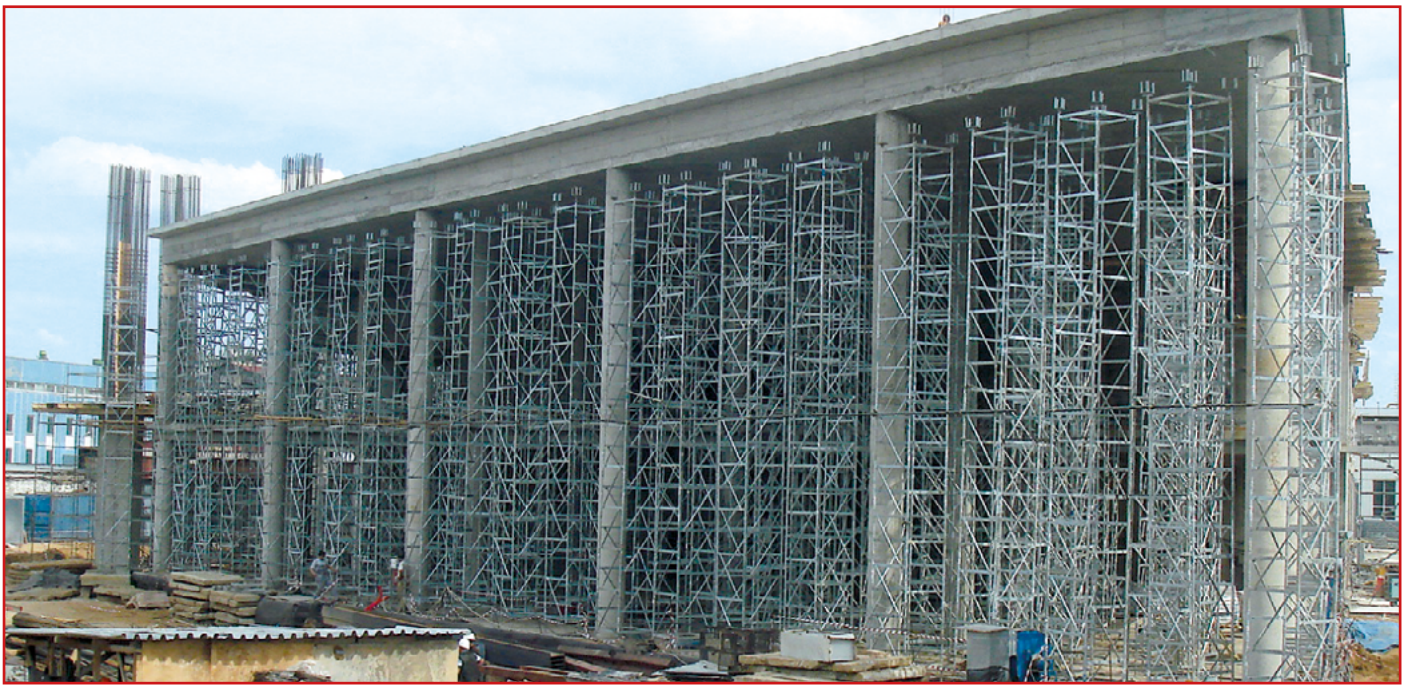

4. TABLE OF LOAD CAPACITY – OF THE CEILING FORMWORK SUPPORTS

Permissible support load capacity (kN) for the given support height												
Support class		Type I			Type II						Type III	
Weight (kg)		15.6	17.5	25.0	17.0	23.0	23.8	31.6	34.6	36.4	15.4	18.4
Index		A0006300	A0006350	A0006410	A0004300	A0004350	A0004400	A0004450	A0004500	A0004550	A0121300C	A0121350C
Supprot working height (m)	5.50									20.0		
	5.40									21.5		
	5.30									22.5		
	5.20									24.0		
	5.10									25.0		
	5.00								20.0	26.0		
	4.90								21.0	27.0		
	4.80								22.0	28.5		
	4.70								23.0	30.0		
	4.60								24.5	31.5		
	4.50							20.0	26.0	33.5		
	4.40							20.5	27.0	35.0		
	4.30							21.0	28.5	35.0		
	4.20							21.5	30.5	35.0		
	4.10			20.0				22.5	32.0	35.0		
	4.00			20.5			20.0	23.0	34.0	35.0		
	3.90			21.5			22.0	24.5	35.0	35.0		
	3.80			23.5			23.5	25.0	35.0	35.0		
	3.70			25.0			25.0	26.5	35.0	35.0		
	3.60			26.5			26.0	27.0	35.0	35.0		
	3.50		14.5	28.5		20.0	28.0	28.5	35.0	35.0		15.0
	3.40		15.5	30.5		22.0	29.5	31.5	35.0	35.0		17.0
	3.30		17.0	33.0		24.0	31.0	33.0	35.0	35.0		19.0
	3.20		18.5	35.0		25.0	31.5	35.0	35.0	35.0		21.0
	3.10		20.0	35.0		27.5	32.5	35.0	35.0	35.0		23.0
	3.00	18.5	21.5	35.0	20.0	29.0	35.0	35.0	35.0	35.0	18.0	25.0
	2.90	20.5	23.0	35.0	21.5	30.0	35.0	35.0	35.0		20.0	27.0
	2.80	23.0	24.0	35.0	23.0	31.0	35.0	35.0	35.0		21.5	29.0
	2.70	25.5	25.5	35.0	25.0	32.0	35.0	35.0	35.0		23.0	31.0
	2.60	27.5	27.0	35.0	26.0	34.0	35.0	35.0			25.0	33.0
	2.50	30.0	28.5	35.0	27.0	35.0	35.0	35.0			26.5	35.0
	2.40	32.0	30.0	35.0	28.0	35.0	35.0				28.0	35.0
	2.30	34.5	31.5	35.0	29.0	35.0	35.0				30.0	35.0
	2.20	34.5	33.0		30.5	35.0					31.5	35.0
	2.10	34.5	34.5		32.0	35.0					33.0	35.0
	2.00	34.5	36.0		35.0	35.0					35.0	35.0
	1.90	34.5			35.0						35.0	
	1.80	34.5			35.0						35.0	
	1.75	34.5			35.0						35.0	

The minimum support load capacity is **20 kN** in the whole height range

The ceiling formwork based on the ceiling supports, wooden formwork girders and plywood 21 mm thick

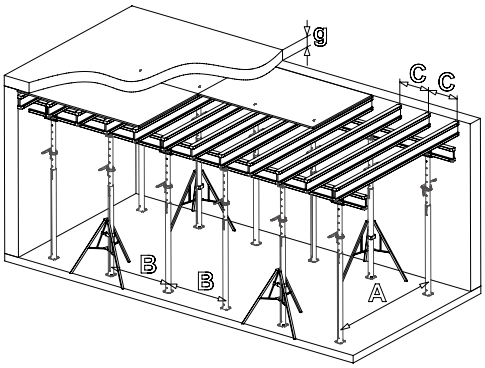

Table of set-ups and loads

			g — concrete thickness													
			14 cm	16 cm	18 cm	20 cm	22 cm	24 cm	26 cm	28 cm	30 cm	40 cm	50 cm	60 cm	70 cm	80 cm
A[m] – longitudinal girders spacing																
B[m] – ceiling supports spacing																
Q[kN] – total load kN/support																
C – transverse girders spacing	0.4 m	**A**	3.30	3.20	3.10	3.00	3.00	3.00	2.80	2.80	2.70	2.50	2.30	2.20	1.90	1.70
		B	1.20	1.15	1.10	1.05	0.95	0.90	0.90	0.8	0.80	0.65	0.60	0.50	0.50	0.50
		Q	21.34	21.75	21.93	21.89	21.29	21.57	21.57	21.49	20.76	20.69	21.87	20.87	20.99	21.43
	0.5 m	**A**	3.10	3.00	2.90	2.80	2.70	2.70	2.70	2.60	2.50	2.90	2.10	2.00	1.90	1.70
		B	1.30	1.20	1.15	1.10	1.05	1.00	1.00	0.90	0.90	0.75	0.65	0.55	0.50	0.50
		Q	21.72	21.28	21.44	21.41	21.18	21.57	21.57	21.13	21.62	21.96	21.64	20.87	20.99	21.43
	0.625 m	**A**	2.80	2.70	2.70	2.60	2.50	2.50	2.50	2.40	2.30	2.10	2.00	1.90		
		B	1.45	1.35	1.25	1.20	1.15	1.10	1.10	1.00	0.95	0.80	0.65	0.60		
		Q	21.88	21.54	21.70	21.68	21.48	21.97	21.97	21.67	21.00	21.39	20.61	21.63		
	0.75 m	**A**	2.70	2.60	2.50	2.50	2.40	2.30	2.30	2.20	2.20	2.00	1.90			
		B	1.50	1.40	1.35	1.25	1.20	1.15	1.15	1.10	1.00	0.85	0.70			
		Q	21.83	21.51	21.70	21.72	21.51	21.13	21.13	21.85	21.14	21.64	21.08			
	q (kN/m²)		5.39	5.91	6.43	6.95	7.47	7.99	7.99	9.03	9.61	12.73	15.85	18.97	22.09	25.21

The A and B set-up values are maximum values . You can use the A and B va lues which are smaller than those specified in the table .

$Q = q \cdot A \cdot B$ $\quad q = w_s + w_b + w_d$ $\quad w_s = 0{,}25\ kN/m^2$ $\quad w_b = 0{,}26\ kN/m^2 \cdot g$ $\quad w_d = 0{,}2 \cdot w_b$ but ≥1,5 kN/ m² i ≤5,0 kN/ m²

w_s – constant load
w_b – concrete load
w_d – instantaneous load

Wooden formwork girder, height h = 200 mm (H-20):
- permissible shearing force – 11 kN (max. reaction on the support – 22,0 kN),
- permissible bending moment – 5,0 kNm

Waterproof plywood, smooth on both sides, #21 mm:
modulus of elasticity E = 7000 MPa

Plywood #21 – permissible q load values [kN/m²]		
C – transverse griders spacing	0,4 m	34,3
	0,5 m	26,5
	0,625 m	21,0
	0,75 m	16,0

Values of the permissible plywood load capacities – q – in the table for the permissible bends f = L/ 500

NOTE: When using the supports whose load capacity is smaller than 22 kN their optimal spacing should be determined in an analytical manner according to the relation below:

$$B_o \leq \frac{Q_z}{(q \cdot A_z)}$$

B_o – maximum ceiling supports spacing determined in an analytical manner

Q_z –permissible load capacity of the support used with the given expansion of
this support (support load capacity table)

q – surface load resulting from the g concrete thickness (table above)

A_z – assumed maximum longitudinal girders spacing

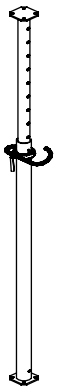

POLISH PRODUCT

52. Ceiling support (B, D)

The supports are made of steel pipes protected by hot dip galvanising.

Index	Weight (kg)	Adjustment range (m)
A0004300	17.00	1.75 - 3.00
A0004350	23.00	1.96 - 3.50
A0004400	24.00	2.35 - 4.00
A0004450	29.00	2.49 - 4.50
A0004500	36.50	2.72 - 5.00
A0004550	36.00	3.00 - 5.50
A0006300	15.60	1.75 - 3.00
A0006350	17.50	1.96 - 3.50
A0006410	25.00	2.35 - 4.10
A0121300C	15.38	1.71 - 3.00
A0121350C	18.35	2.01 - 3.50

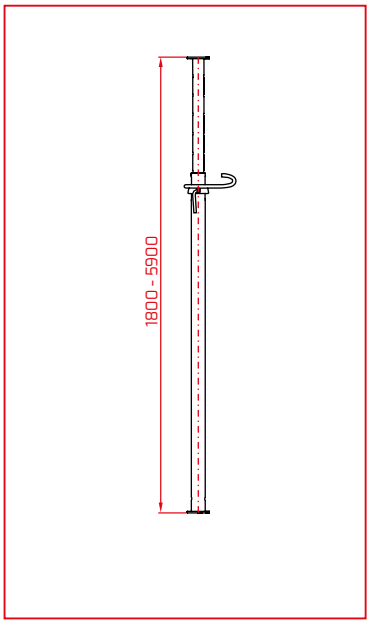

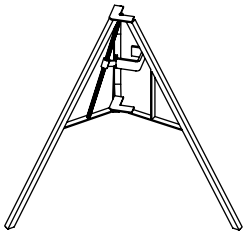

53. Tripod for supports

Used as a protection against falling of the supports during boarding.

Index	Dimensions (cm)	Weight (kg)
A0025001	98	7.90

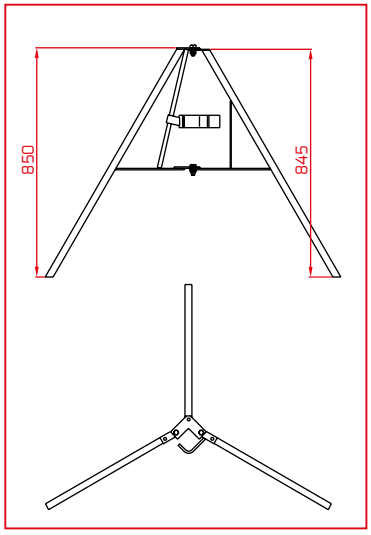

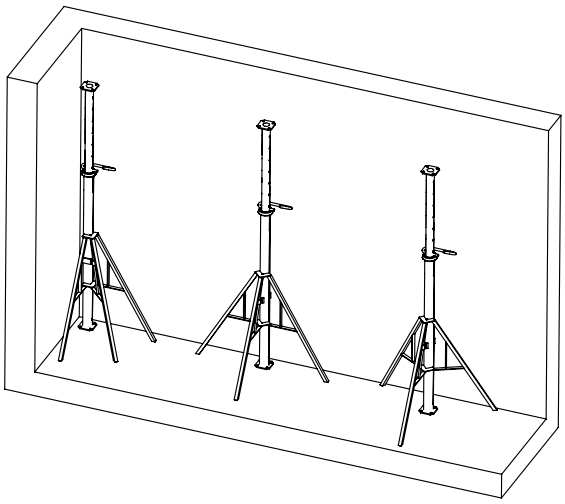

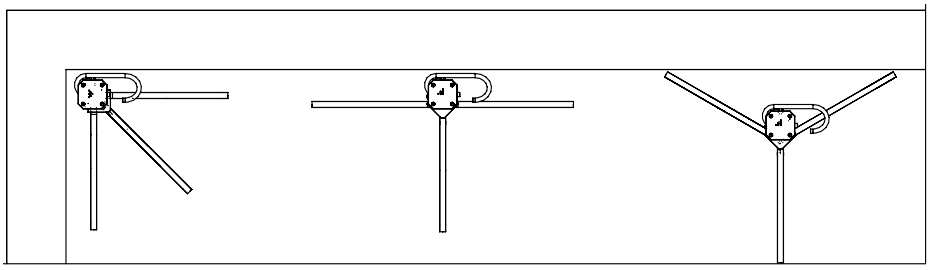

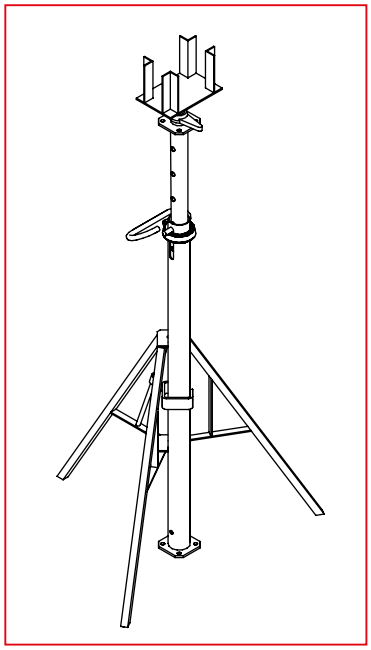

Diagram presenting installation of the support in the tripod

54. Wooden formwork girder

- full section girder in the constant shape
- permissible bending moment – 0.5 kNm
- permissible shearing force – 11.0 kN
- web made of the triple-layer glued board
- girder with hardware

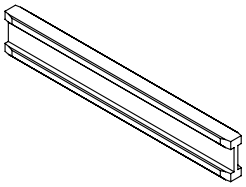

Index	Dimensions (cm)	Weight (kg)
A0010130	130	7.16
A0010165	165	8.99
A0010180	180	9.83
A0010245	245	11.70
A0010250	250	11.90
A0010265	265	12.70
A0010290	290	13.90
A0010330	330	15.80
A0010360	360	17.20
A0010390	390	18.70
A0010450	450	21.60
A0010490	490	23.50
A0010590	590	28.30

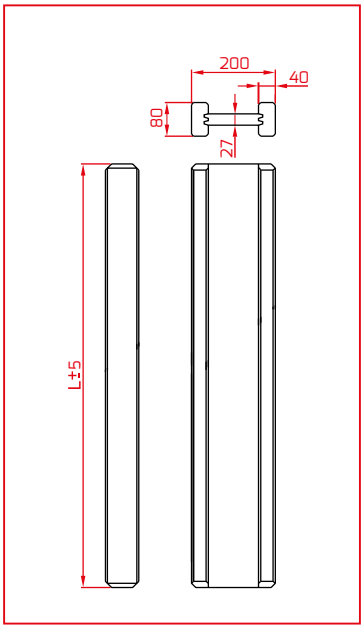

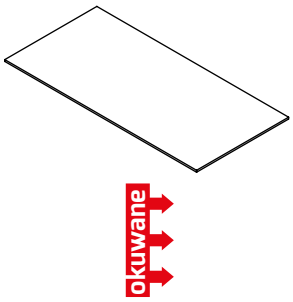

55. Formwork plywood

Plywood more than 21 mm thick, smooth on both sides, waterproof, protected with the resin coat.

Index	Dimensions (mm)	Weight (kg)
A0998155	21x1550x1550	35.70
A0998250	21x1250x2500	46.50
A0998300	21x1500x3000	61.20
A0999150	21x500x1500	7.20
A0999200	21x500x2000	9.60
A0999250	21x500x2500	12.00

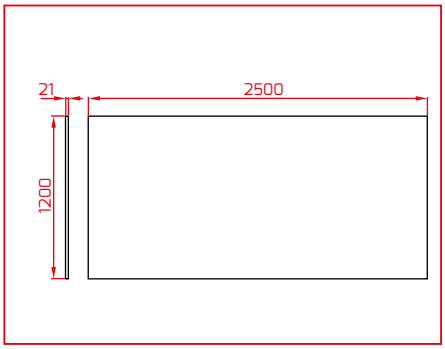

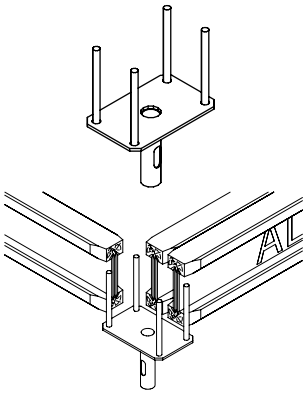

56. Cross head

Used for supporting the ceiling formwork. The head forks spacing allows for the installation of one girder and when the head is rotated 90° – two girders.

Index	Dimensions (cm)	Weight (kg)
A0020001	22x14	2.60

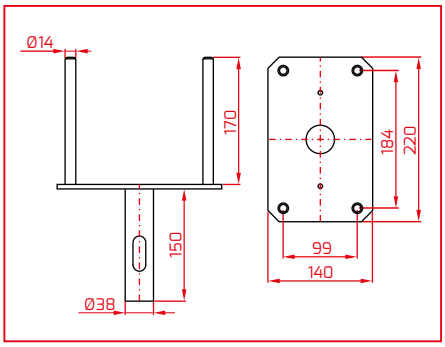

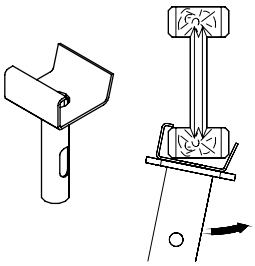

57. Intermediate head

Used as a girder intermediate support.

Index	Dimensions (cm)	Weight (kg)
A0020002	10x10.4	0.86

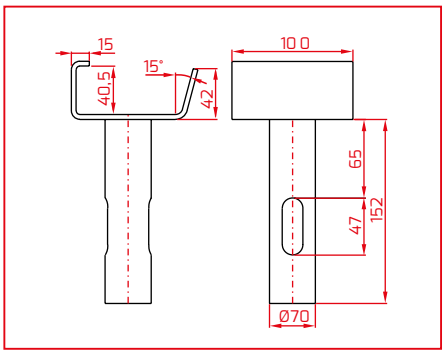

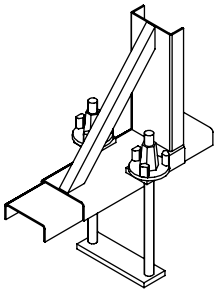

58. Beam clamp

Used for the precise boarding of binders, beams, lintels etc. Provides horizontal shift adjustment to easy and quickly locate the formwork straight or in the required shape.

Index	Dimensions (cm)	Weight (kg)
A0026000	40	5.90

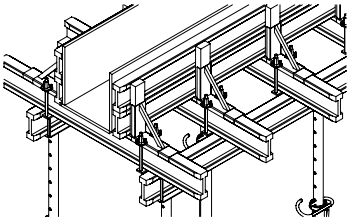

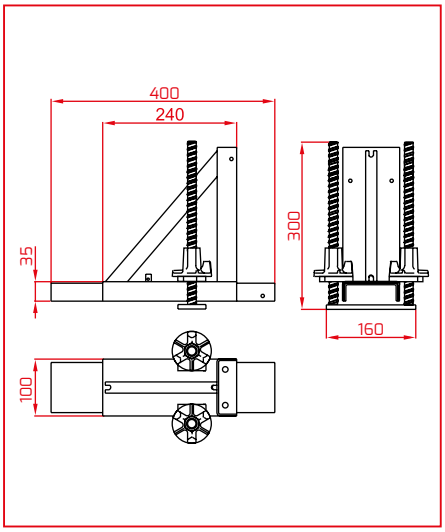

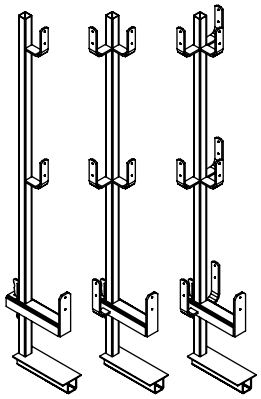

59. Railing post

All types of posts protect workers during boarding. The maximum posts spacing is 2 m.

Name	Index	Weight (kg)
Railing post	A0035130	6.90
Corner railing post	A0036130	7.70
Standard post	A0038130	8.43

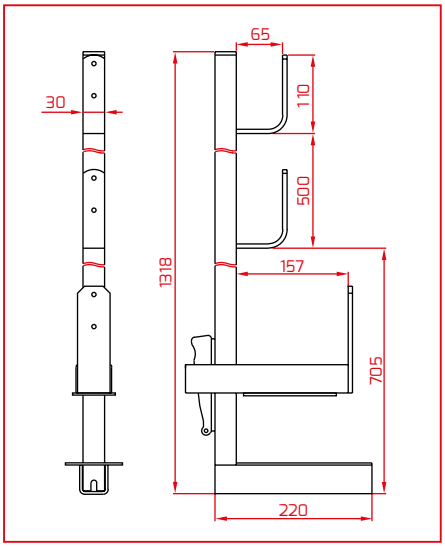

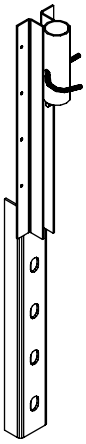

60. Top wall bracket

Perfect for locating the formwork of the extreme ceiling edges on the existing walls or binders.

Index	Dimensions (cm)	Weight (kg)
A0030000	90	4.10

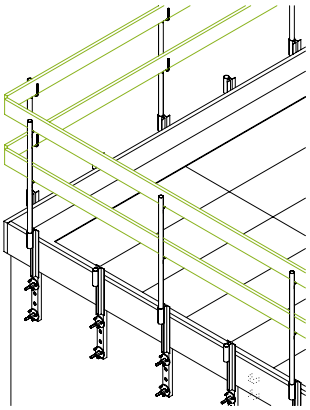

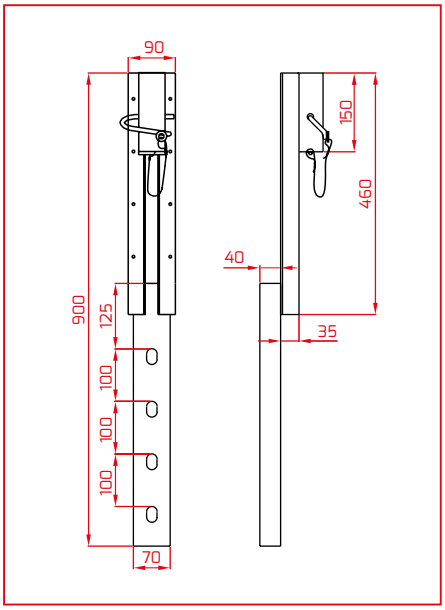

61. Aluminium shuttering board

The frames of the shuttering board are made of aluminium, filled with the waterproof plywood.

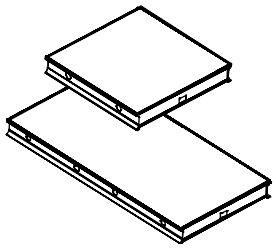

Index	Dimensions (cm)	Weight (kg)
A0050945	90x45	8.22
A0050960	90x60	9.70
A0050975	90x75	11.20
A0050990	90x90	13.26
A0051845	180x45	15.91
A0051860	180x60	18.70
A0051875	180x75	21.48
A0051890	180x90	23.03
A0051898	180x180	54.40

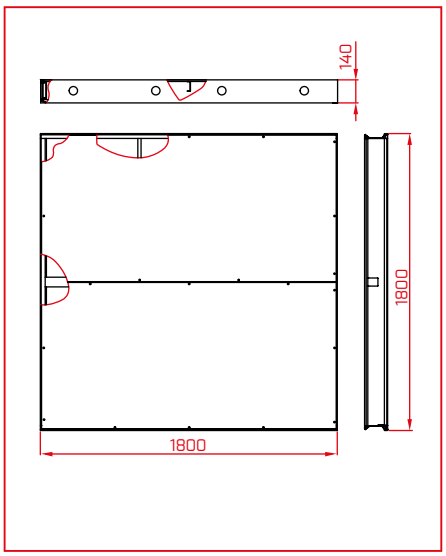

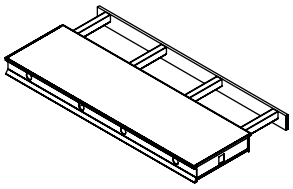

62. Ceiling formwork aluminium expandable board

The board width can be adjusted from 55 up to 90 cm.

Index	Dimensions (cm)	Weight (kg)
A0060055	55-90x180	30.56

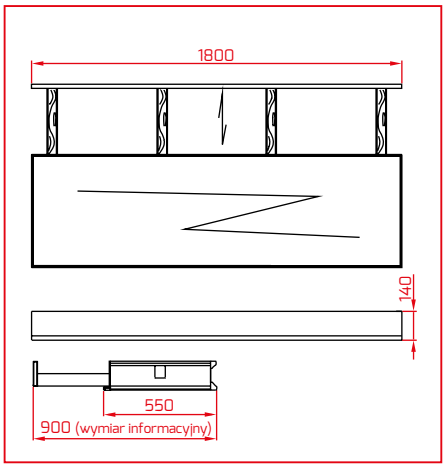

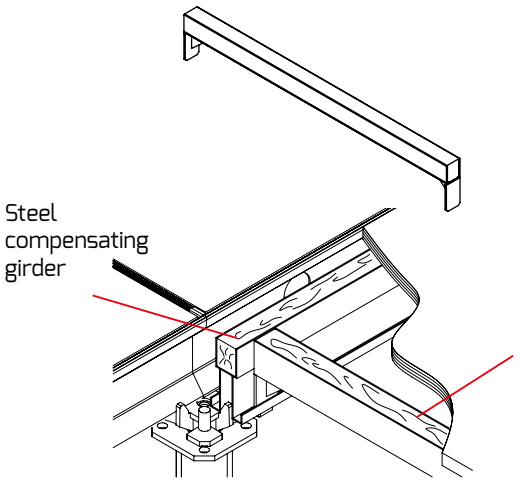

63. Transverse girder

Fastened transversely to the compensating girders.

Index	Weight (kg)
A0081090	2.70

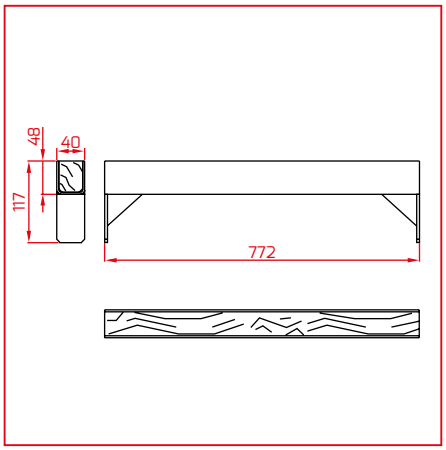

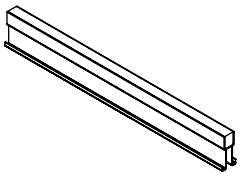

64. Steel compensating girder

It is a steel girder with the in-built wooden slat.
It is installed where the boards need to be supplemented.

Index	Dimensions (cm)	Weight (kg)
A0080090	90	5.75
A0080180	180	11.45

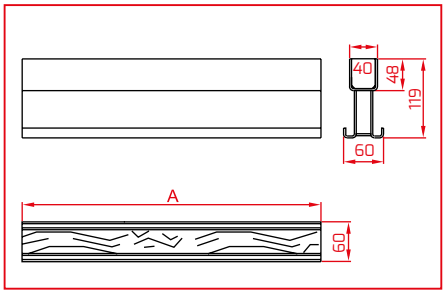

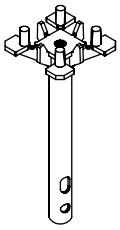

65. Steel supporting heada

Located in the support, used as a support for the ceiling aluminium shuttering boards.

Index	Weight (kg)
A0070000	2.28

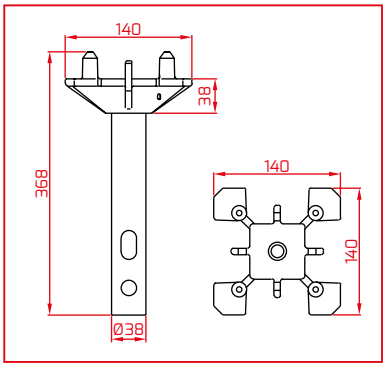

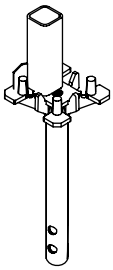

66. Head – steel post socket

Used for fixing the working platform posts.

Index	Weight (kg)
A0072000	3.24

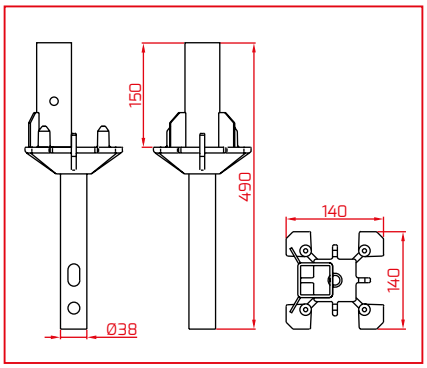

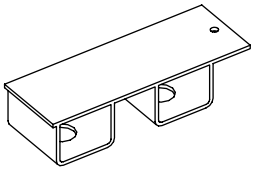

67. Steel head shoe

Fastened on the heads, used for installing the square timbers to supplement the formwork.

Index	Weight (kg)
A0075000	0.59

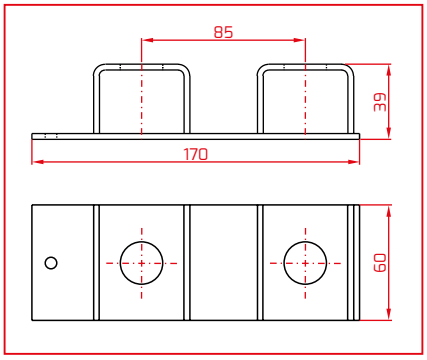

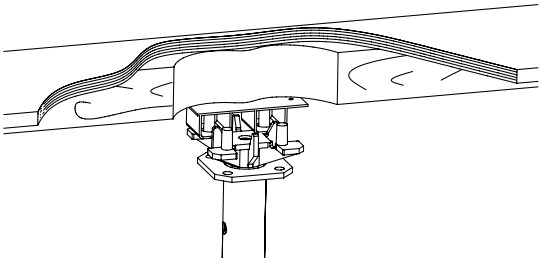

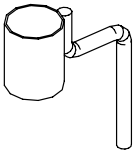

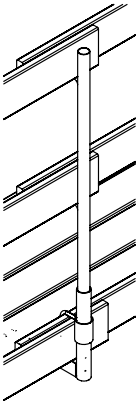

68. Steel toeboard grip

Installed on the working platform post to hold the toeboard.

Index	Weight (kg)
A0078000	0.40

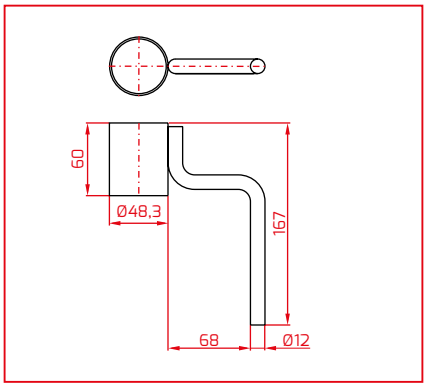

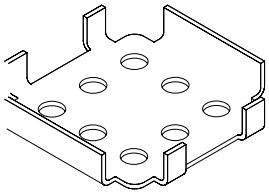

69. Head covery

The head cover together with the supporting head replaces the functions of the corner supporting head. An economical solutions for such users of ALUstrop who also use the supporting heads and do not want to invest in the corner supporting.

Index	Weight (kg)
A0070005	0.86

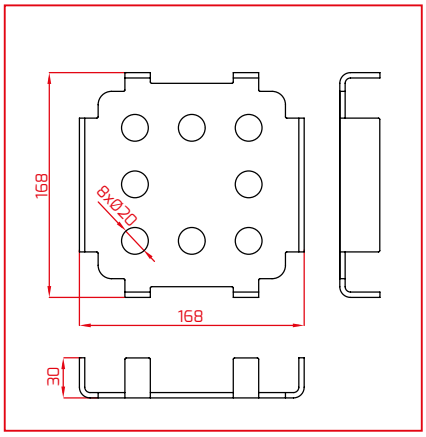

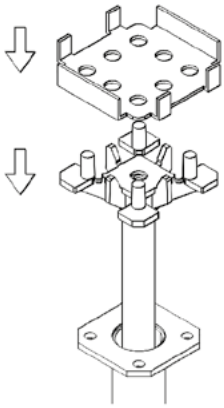

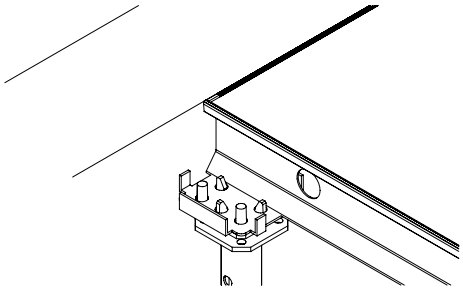

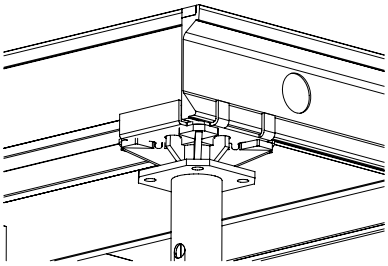

70. Installation rod unit

Aluminium adjustable component. Facilities ceiling board installation. Used to lift ceiling boards manually.

Index	Adjustment range (m)	Weight (kg)
A0078005	2.25 - 3.65	4.04

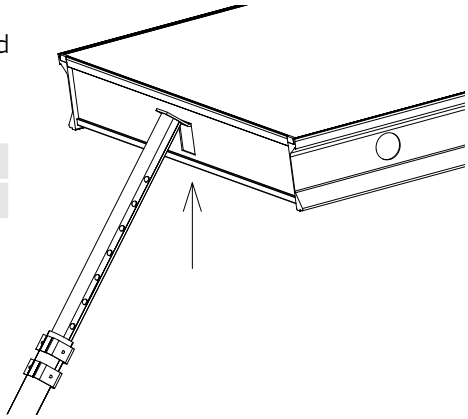

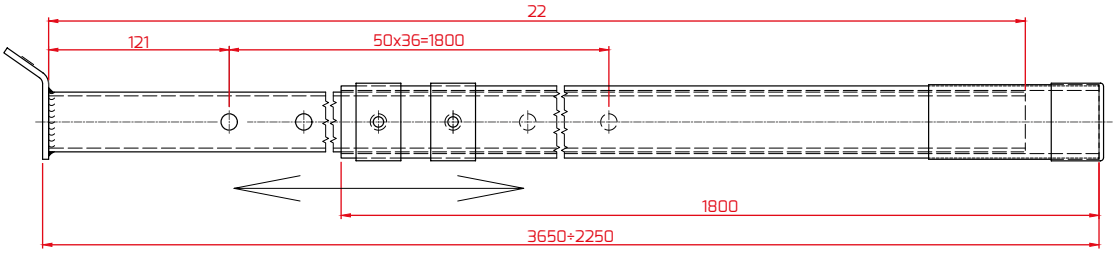

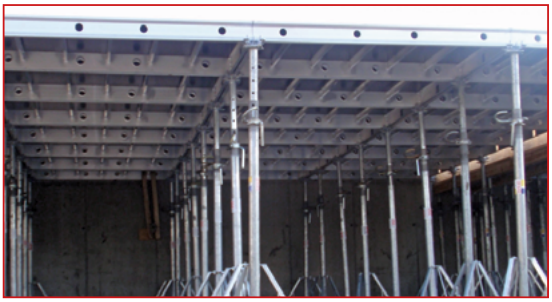

6. BASE ELEMENTS OF S10 SUPPORTING TOWER

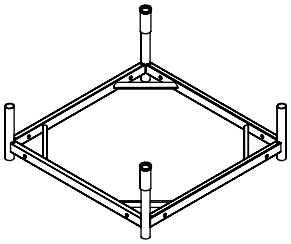

71. Base frame

Installed at the top and bottom of the tower, stiffens the structure horizontally.

Index	Weight (kg)
A0040100	17.40

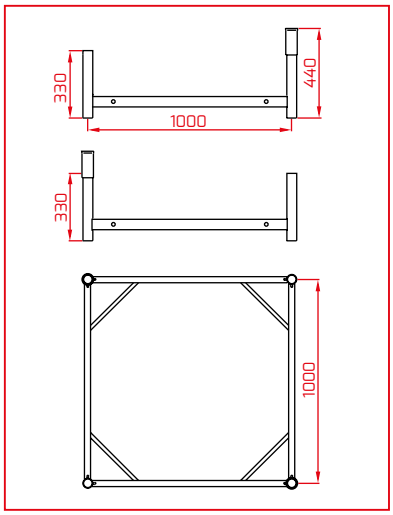

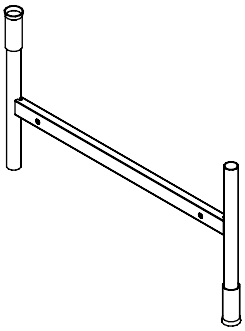

72. Basic frame

Stiffens the structure horizontally. 4 basic frames are installed at the height of 1 m.

Index	Weight (kg)
A0041050	7.70

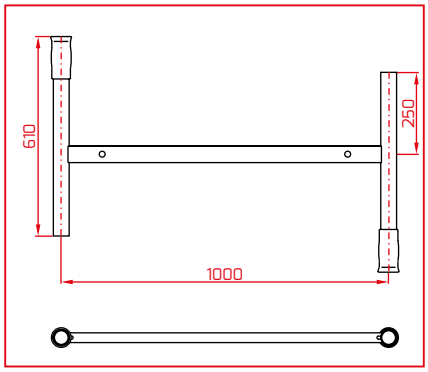

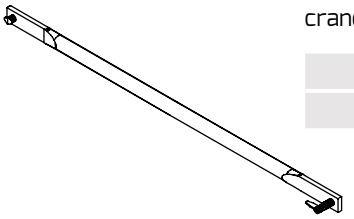

73. Vertical bracing

Stiffens the tower sides and connects the frames during crane transportation.

Index	Dimensions (cm)	Weight (kg)
A0042125	125	2.50

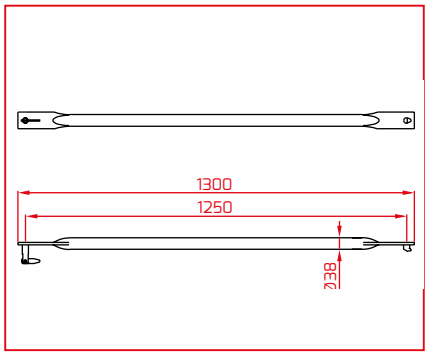

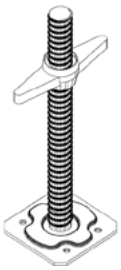

74. Adjustable footing

Used for compensating the ground slopes. Adjustment range – 400 mm.

Index	Weight (kg)
E511206	4.28

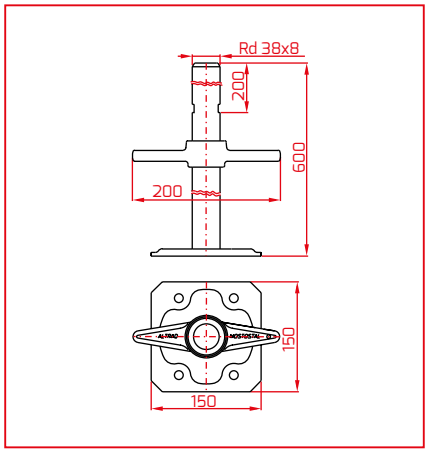

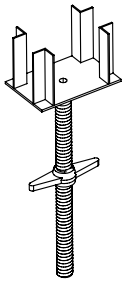

75. Threaded cross head

Used for supporting the ceiling formwork. Adjustment range – 350 mm.

Index	Weight (kg)
E642210	10.00

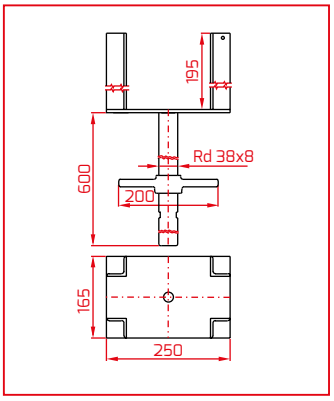

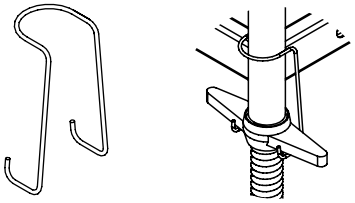

76. Transportation protection

Protects the base and head against slipping out of the frames.

Index	Weight (kg)
A0040000	0.10

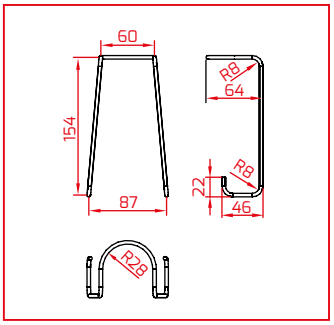

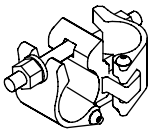

77. Normal coupling

Connects the pipes Ø = 48,3 at a right angle.

Index	Weight (kg)
E581119	1.25

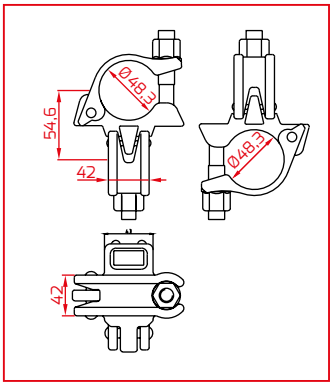

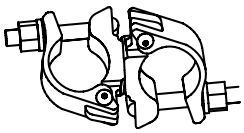

78. Rotary coupling

Connects the pipes Ø = 48,3 at any angle.

Index	Weight (kg)
E581319	1.20

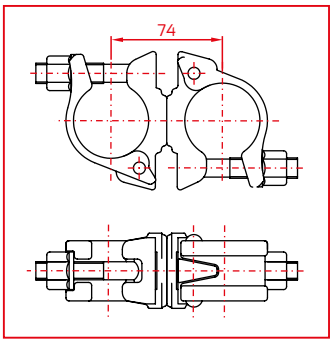

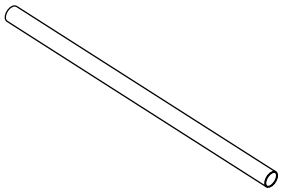

79. Standard pipe

Used for stiffening the towers (L = 1 ÷ 6 rm).

Index	Dimensions (cm)	Weight (kg)
E440510	100	3.58
E440520	200	7.16
E450530	300	10.7
E440540	400	14.3
E440550	500	17.9
E440560	600	21.5

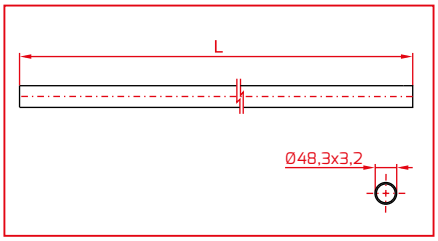

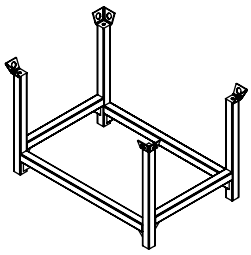

80. Module pallet

Perfect for economical storage and transportation of the formwork elements. Adapted for forklift and crane transportation.

Index	Dimensions HxAxB (m)	Single pallet load capacity (kN)	Max number of levels	Weight (kg)
E822800	0.82x0.88x1.28	20	3 poziomy - 60 kN	40.20
E823800	0.82x0.88x1.28	15	3 poziomy - 45 kN	29.00

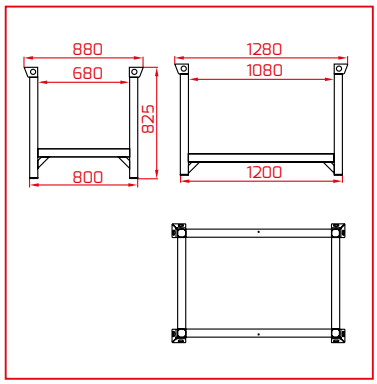

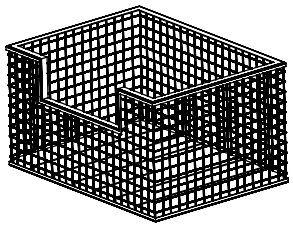

81. Module basket

Available as a set including the module pallet, used for storage of small elements. It can be used as an additional or supplementary element for the module pallet.

Index	Dimensions (cm)	Weight (kg)
E822900	108x68	30.40

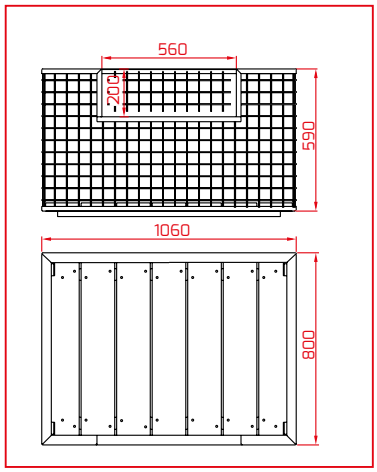

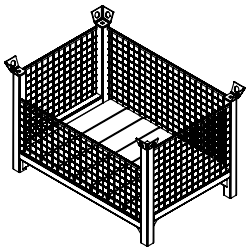

82. Mesh pallet

Perfect for the transportation of the formwork elements. Adapted for forklift and crane transportation.

Index	Dimensions HxAxB (m)	Single pallet load capacity (kN)	Max number of levels	Weight (kg)
E822808	0.82x0.88x1.28	20	3 levels – 60 kN	69.70
E823808	0.82x0.88x1.28	15	3 levels – 45 kN	58.50

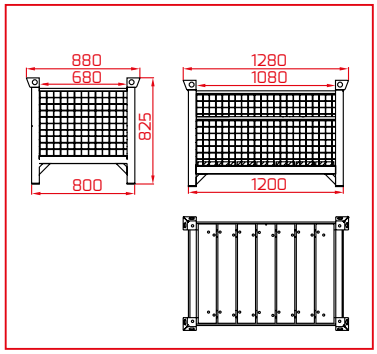

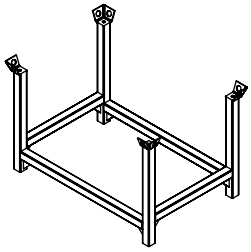

83. Pallet

Perfect for transporting formwork components. Can be moved with a forklift truck and a crane.

Index	Dimensions HxAxB (m)	Single pallet load capacity (kN)	Max number of levels	Weight (kg)
E822970	0.87x1.18x1.56	10	3 levels - 30 kN	40.70
E822972	1.23x1.18x1.56	10	3 levels - 30 kN	47.10

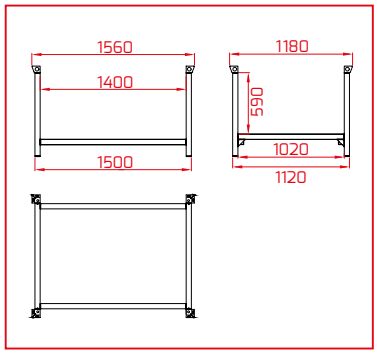

84. Anti-adhesive liquid

Oil based anti-adhesive liquid to lubricate the shuttering boards from the inside of the formwork to protect them against concrete sticking.

Index	Weight (kg)
A2599001	20.00

IV ROTAX SUPPORTING TOWER

Apart from the S10 supporting tower ALTRAD-Mostostal offers also towers made of the ROTAX scaffolding elements.

TWO SYSTEMS, MULTIPLE POSSIBILITIES

1. The structure of the S10 supporting towers includes steel frames with the supports spacing of 1.0 x 1.0 m and the height increased in 0.5 increments.

2. The supporting towers which are based on the ROTAX scaffoldings may be built with the steel elements with the supports spacing of just 0.73 x 0.73 m (other spacing can be obtained depending on the length of the system transoms) and the height increased in 0.5 m increments.

3. Compared to the ROTAX based towers the S10 supporting towers feature an advantage which is a quicker installation.

4. The ROTAX system allows for the systemic connection of any number of towers. As regards the S10 towers,
   to connect a few towers you should use the standard pipes and cross couplings.

5. The ROTAX tower design allows for the installation of the steel brackets (0.36 m; 0.73 m; 1.090 m) which are used to install the working platforms. The connection is made with the systemic knots.

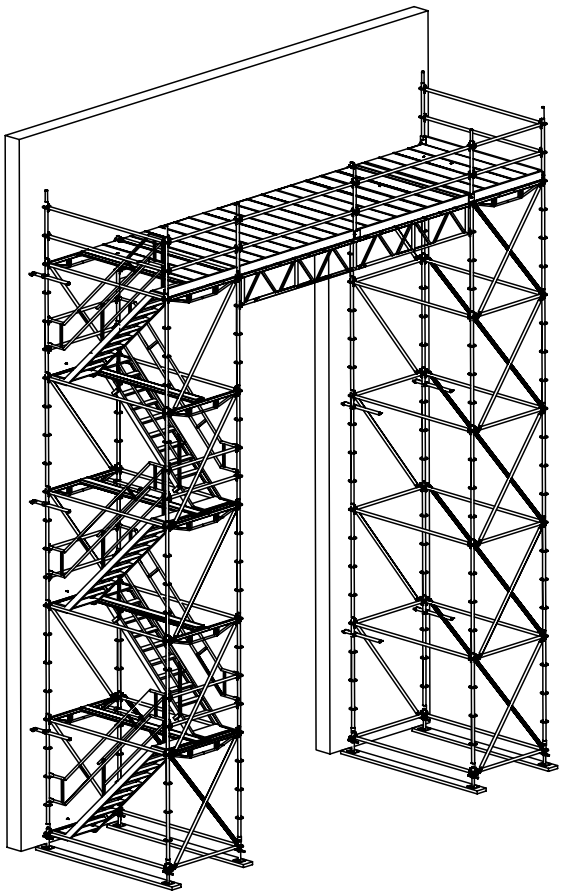

Inspection platform – sample application of the ROTAX tower and staircase

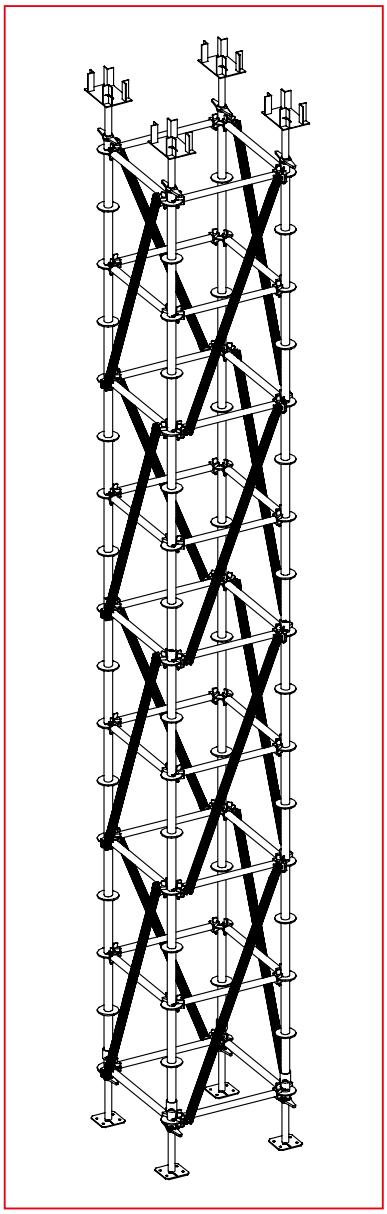

V STAIRCASES (ROTAX, FACADE)

The offer of ALTRAD-Mostostal is supplemented by the economical external staircases which facilitate the construction and finishing works.

ROTAX staircases

The staircases based on the ROTAX and Mostostal Plus type scaffoldings are used to provide communication between the building levels. They can have the form of single or double cases.

The staircases are available as free-standing structures (anchored to the building) or they may be positioned at the scaffolding (permanently connected with the scaffolding).

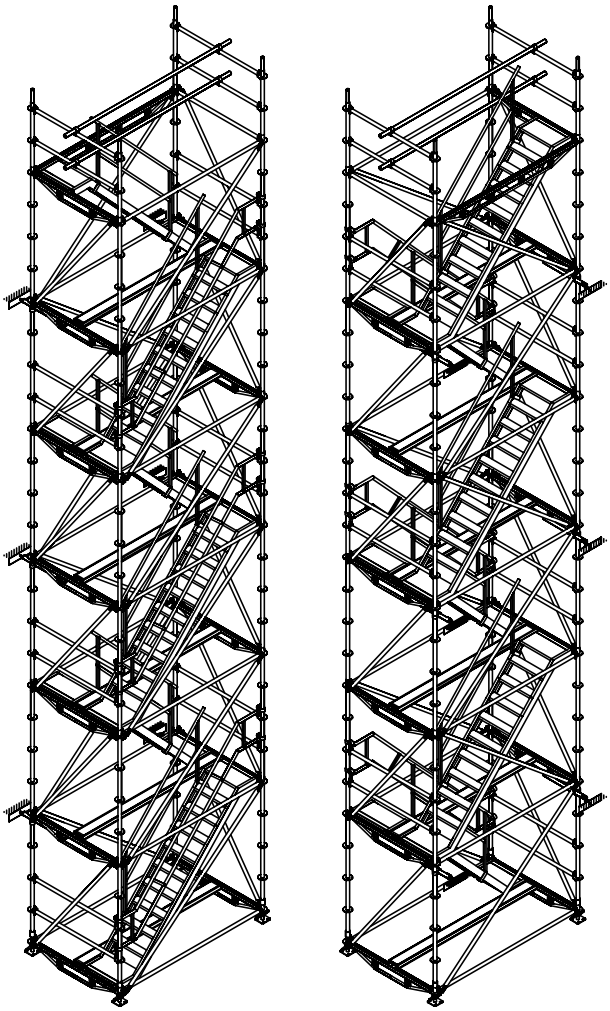

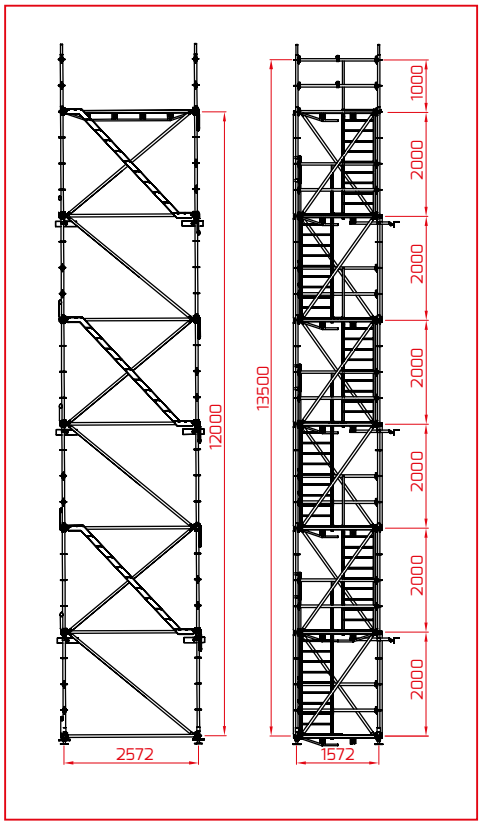

Mostostal Plus staircases

Both types of the staircases feature some common elements: stairs, internal railings.

The external staircase is normally installed in the bay measuring 3.07 m
or 2.57 m.

According to the EHS regulations the circulation paths should be made max. every 40 m with the distance of the workplace which is located at the greatest distance from the centre of the circulation path not exceeding 20 m.

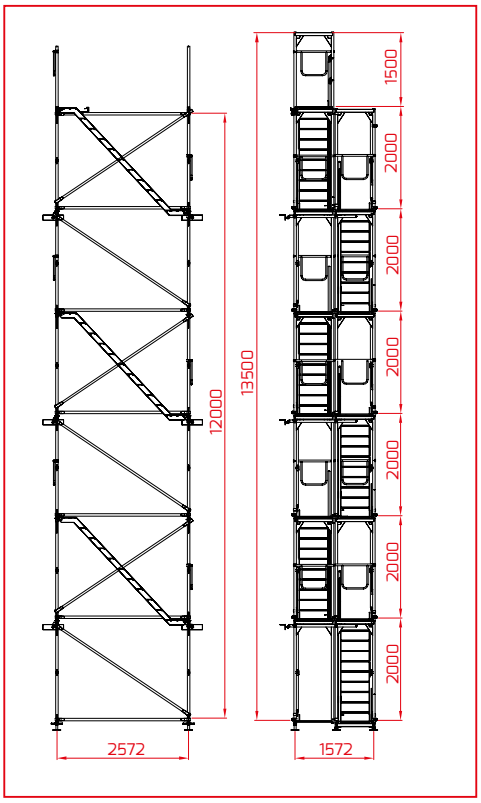

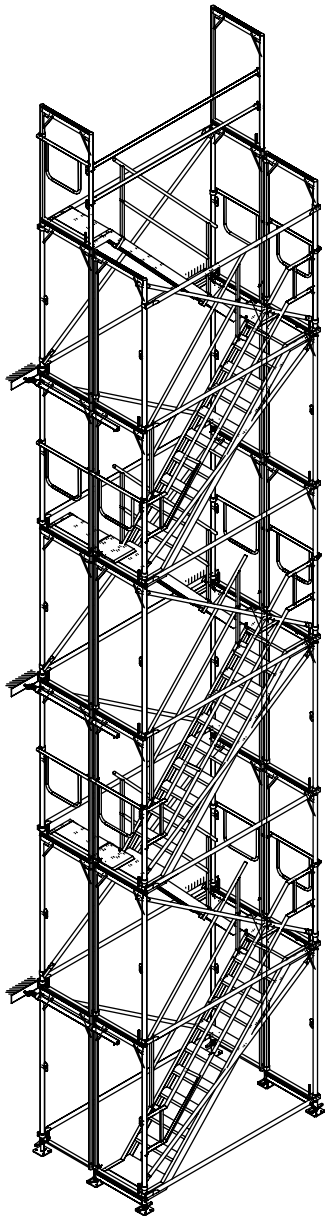

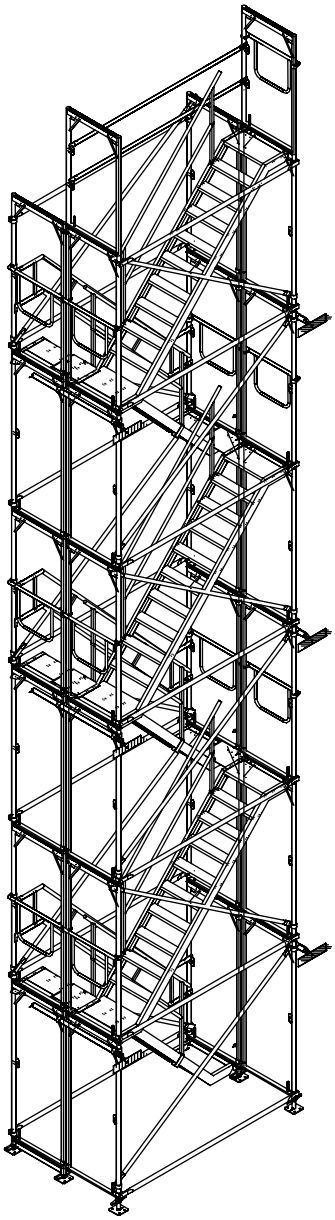

VI EUROSCHAL SOFTWARE

A comprehensive client service is one of the basic Altrad-Mostostal objects – from the design to the delivery of the full set of formwork to the construction site. To meet these guidelines the company uses the professional Euroschal software. This software is dedicated to create the models of the formwork structure set-ups for both the ceiling and the wall formwork with all boarding systems available in the Altrad-Mostostal offer.

By using Euroschal you can prepare the technical documentations while considering the individual requirements such as e.g. division into tacts, horizontal board set-up, using the superstructure vertically or the compensating inserts horizontally, considering the lift shaft elements, using the climbing formwork etc.

The designing phase can be completed in two possible variants, i.e. only in terms of the possibilities of Euroschal programme and with full harmonisation and collaboration with Autocad application (import – export of DWG, DXF files).

Designing the formwork with the computer is even easier now. The appropriate elements can be selected and the helpful graphical diagrams can be prepared in a few simple steps.

1. Using the documentation prepared in Autocad and import to Euroschal.

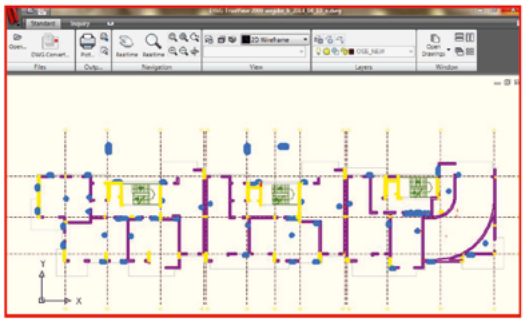

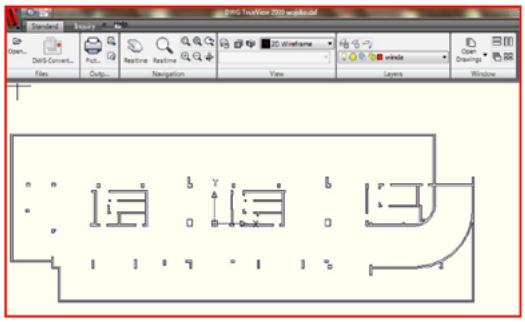

2. Dividing the facility into the so-called tacts – or generation of the common part of the elements.

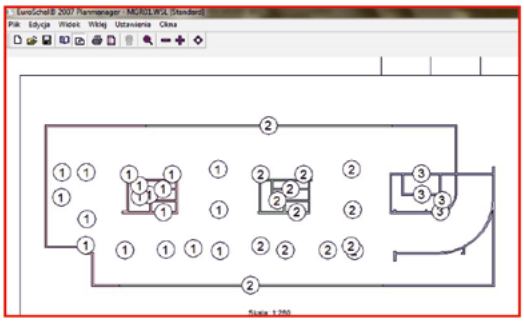

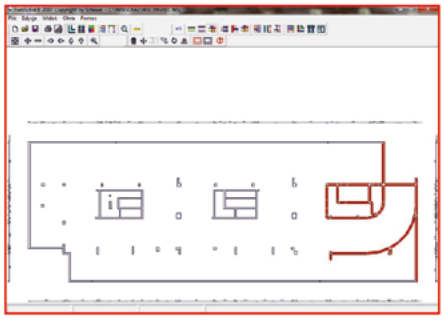

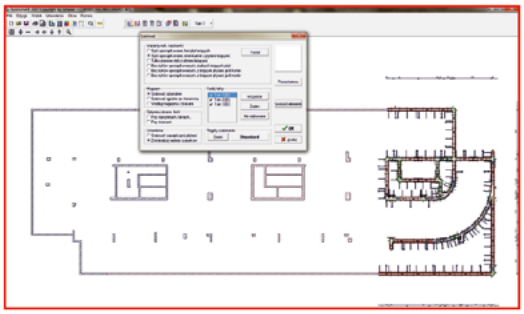

3. The design is prepared automatically and it can be modified and supplemented manually in any manner.

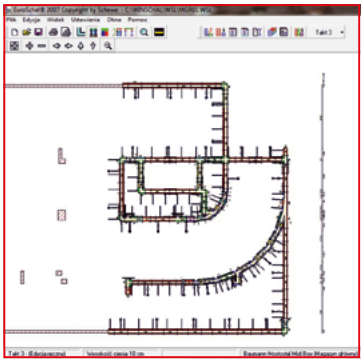

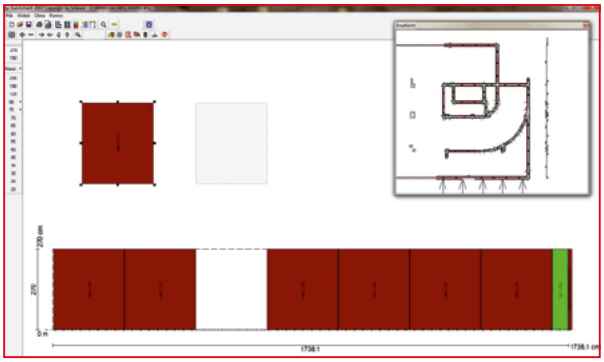

4. Preparing the technical documentation and the offer.

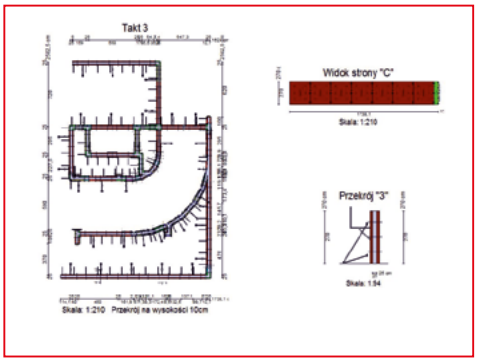

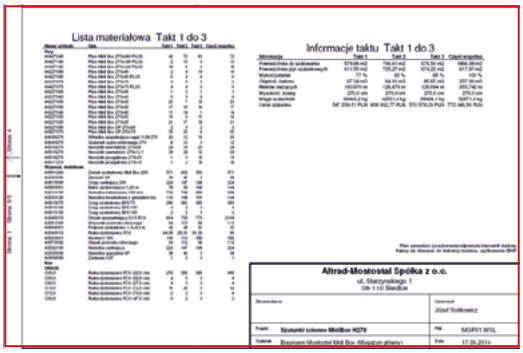

By using Euroschal you can generate the element specifications – including the material dispositions for the warehouse, summary of weight, surface area and net value with the option to convert to the selected currencies.
The programme also provides the possibility to edit the selected foreign languages both in the basic menu and in the text of the offer.

5. Designing the ceiling formwork.

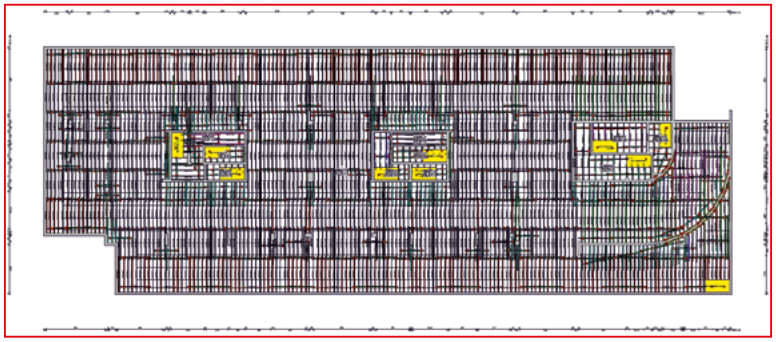

6. Atypical designs – example.

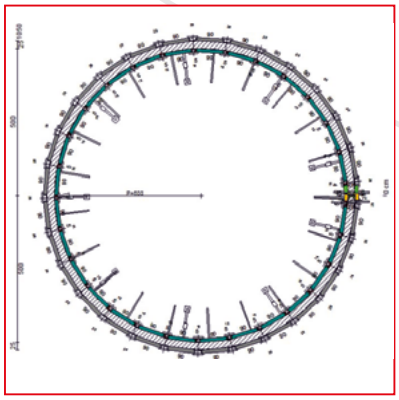

VII OUR LOCATION

- **Altrad-Mostostal Sp. z o.o. (Siedlce)**
  +48 25 644 72 84

Dorota Jaszczuk – Commercial Director
GSM +48 692 416 723
e-mail: Dorota.Jaszczuk@altrad.com

Katarzyna Kalicka – Sales Manager
(mazowieckie, podlaskie, łódzkie, warmińsko-mazurskie provinces)
GSM +48 604 481 381
e-mail: Katarzyna.Kalicka@altrad.com

Katarzyna Matejuk – Sales Manager
GSM +48 608 065 535
e-mail: Katarzyna.Matejuk@altrad.com

Michał Sędzimierz – Sales Manager
GSM +48 606 471 200
e-mail: Michal.Sedzimierz@altrad.com

Bogdan Bentkowski – Sales Manager
GSM +48 602 578 862
e-mail: Bogdan.Bentkowski@altrad.com

/altradmostostal

NOTES

NOTES

NOTES

MOSTOSTAL
SCAFFOLDING
FORMWORK

ALTRAD

ALTRAD-MOSTOSTAL Spółka z o.o.
ul. Starzyńskiego 1, 08-110 Siedlce - Poland
Tel. +48 25 644 72 84 - Tel. +48 25 644 82 93 - Email: handlowy@altrad-mostostal.pl
www.altrad-mostostal.pl

05.2023