MOSTOSTAL
SCAFFOLDING
FORMWORK

ALTRAD

SUPPORT TOWERS AST109

INSTALLATION MANUAL

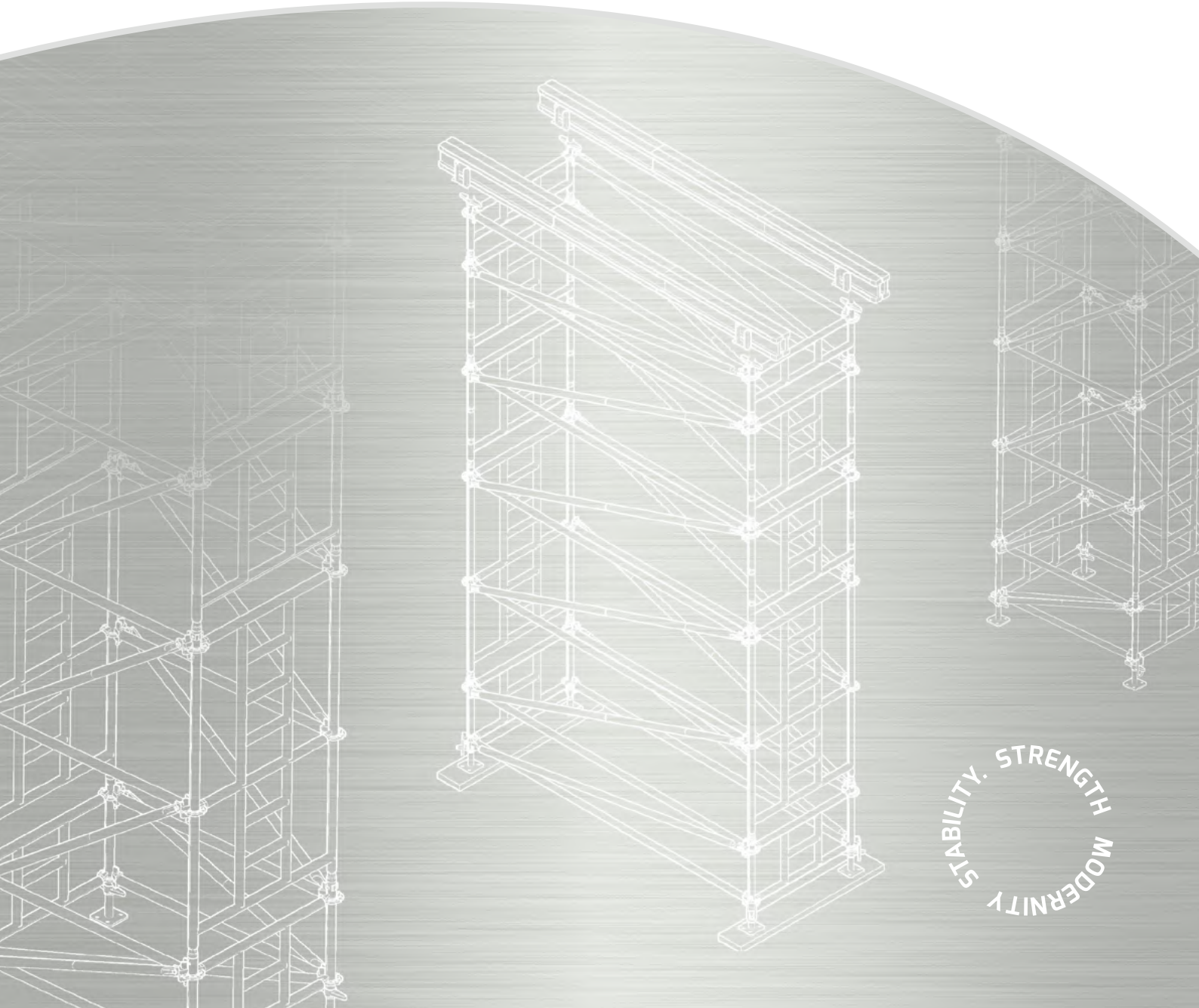

MOSTOSTAL
SCAFFOLDING
FORMWORK

ALTRAD

SUPPORT TOWERS AST109

INSTALLATION MANUAL

www.altrad-mostostal.pl

TABLE OF CONTENTS

PART I - support towers AST109 - system description

1. Introduction 5
2. Component evaluation criteria 6
3. Frame and transom node connection specifics – rope installation 6
4. Support tower installation steps 8
5. Horizontal AST109 tower installation 20
6. AST109 support tower removal 21
7. AST109 tower system components 21
7.1 Steel frame 0,5 x 1,09 m 21
7.2 Steel frame 1,0 x 1,09 m 22
7.3 Steel frame 2,0 x 1,09 m (installed by two people) 22
7.4 Steel frame 0,71 x 1,09 m 23
7.5 Adjustable base 0,6 m 23
7.6 Cross threaded head 0,45 m 23
7.7 Cotter 24
7.8 Base connector 24
7.9 O-transoms 24
7.10 Vertical braces 25
7.11 Horizontal braces 25
7.12 Single platform 25
7.13 Standard steel pipes 26
8. Joints 26
8.1 Regular connector 26
8.2 Swivel connector 26
8.3 Longitudinal connector 27
8.4 Double wedge connecto 27
8.5 Wedge swivel connector 27
8.6 Regular wedge connector 27

PART II AST109 support tower technical details

1. Introduction 28
1.1 Basic information 28
2. Loads 29
2.1 Wind load 30
2.2 Setup configuration tables 34
3. Locked head towers 40
3.1 Static diagram 40
3.2 Locked AST109-109 tower 41
3.3. Locked AST109-157 tower 44
3.4 Locked AST109-207 tower 47
3.5. Locked AST109-257 tower 50
3.6 Locked AST109-307 tower 53
4. Free towers 56
4.1 Static diagram 56
4.2 Free AST109-109 tower 56
4.3. Free AST109-157 tower 60
4.4 Free AST109-207 tower 63
4.5 Free AST109-257 tower 66
4.6 Free AST109-307 tower 69
5. Towers at installation 72
5.1 Static diagram 72
5.2 Ballasting at installation 72
6. Head and base projection length adjustment description 75
7. Sample tower assemblies 76
8. Conformity certificate 77

PART I - SYSTEM DESCRIPTION

1. INTRODUCTION

AST109 steel support towers manufactured by Altrad-Mostostal Spółka z o.o. based in Siedlce, Poland, are a new proposal for the construction industry customers that you can use to solve the problems with supporting components with a high dead weight. The developed tower support system assumes the use of few components for the configuration of towers with different load-bearing characteristics.

The system can be used to create a wide range of setup configurations which may cause questions. In case of doubt please contact our representatives at the company's headquarters.

The stability of the AST109 tower assemblies must be under the constant control of competent persons especially during installation and removal. The towers can only be installed or removed by trained persons and under the supervision of competent technical services.

Components of full value manufactured by Altrad-Mostostal Spółka z o.o. with confirmed technical characteristics should be used for installation.

Prior to installation check the technical condition of the components and use only good components for installation. Do not use damaged components.

Installation, removal and relocation should be carried out in the least risky way paying attention to the possibility of falling from a height. These activities should be carried out in a way that reduces the risk to a minimum.

Installers erecting the towers must be equipped with personal protective equipment corresponding to the existing risk taking into account the actual conditions at the installation site.

Conditions to be considered when selecting personal protective equipment:

- employee skills (qualifications),
- type and duration of exposure to risk in the area of work,
- likelihood of falling from a height,
- condition of the surface which the worker may fall on,
- condition of the workplace and access to it.

The necessary technical, organizational and personal resources must be provided for the time of installation, removal and reconstruction.

Personal protective equipment must correspond to the work situation and must take into account the legal regulations in force in the given installation area.

The basic attachment points for the lanyards are shown in in chapter 3 (I Part). These points are tested using the drop tests. Other attachment points for the lanyards must be checked individually by the installers.

Before the tower installation a work completion plan must be presented with a design of the layout and a description of the equipment to protect the employees.

The work completion plan cannot provide for the throwing of components during installation. The components can be transported manually in a way that prevents them from slipping out or falling.

Persons who are authorized to erect scaffoldings have sufficient skills to install and supervise the erection of support towers.

The support tower installation and use manual must be available on the tower installation site.

Each user of the support towers is required to carry out daily inspections of the technical condition and status of the installed assemblies.

Should any damage or missing assembly components be found the support towers should be supplemented with the missing components or decommissioned.

2. COMPONENT EVALUATION CRITERIA

Use only scaffolding components of full value for installation.

Components with visible signs of damage cannot be used. In particular, it is not allowed to use:
- components with traces of corrosion in the connection zones (welds),
- load-bearing frame type components with visible damage in the form of pipe bends, cross-section deformations,
- steel platforms with damaged sheathing, damaged or bent hooks,
- aluminium and plywood platforms with damaged plywood sheathing in the form of delamination, cracks,
- swelling, cavities or bent load-bearing platform beams,
- screw bases with damaged threads, bent pins or hard-to-turn nuts.

Destroyed components should be replaced with faultless ones and the components with such damage that they cannot be repaired on site should be sent for repair. You can straighten the components only if the circular cross-section is not deformed.
It is forbidden to repair load-bearing structure components, i.e. stands, braces and bases.

3. FRAME AND TRANSOM NODE CONNECTION SPECIFICS (ROPE INSTALLATION)

— Steps for Fastening Transoms to Node

Fig. 3.1

Fig. 3.2

Fig. 3.3

a. In the first stage (Fig. 3.1) slide the transom head onto the hole disc so that the head covers the disc.
b. Insert the wedge through one of the seven holes in the disc and set it upright. (Fig. 3.2)
c. Tap the wedge with a 500 g hammer until the correct connection is obtained. (Fig. 3.3)

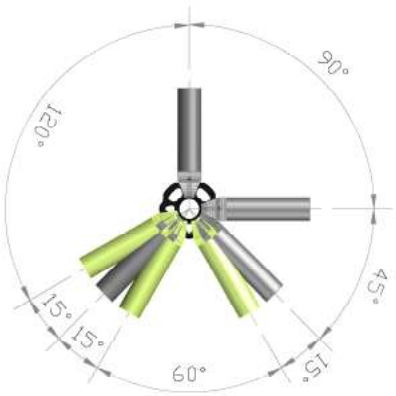

Fig. 3.4

By installing the transoms in the small holes of the disc we will obtain a rectangular grid of the tower. The large holes of the discs are intended for connecting the braces. These holes used to connect the transoms make the transoms rotate around the vertical axis of the load-bearing pipe. Fig. 3.4 shows the range of possible adjustments.

The components of the load-bearing frames in the tower system are made of the pipe of Ø 48,3 mm with 3.2 mm wall.

— Locations for attaching the lanyards to the AST109 tower components

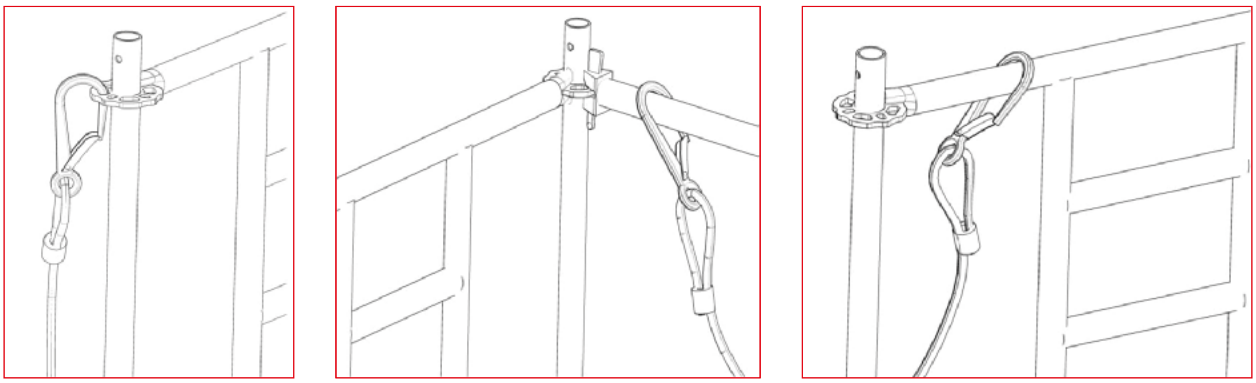

a) *b)* *c)* *Fig. 3.5*

These points are tested using the drop tests.

— Materials:

The basic material most of the details are made with is S355JR steel. The locking components such as a wedge are made of S550MC steel.

4. SUPPORT TOWER INSTALLATION STEPS

— Frame 1.0 m Version

4.1 Lay wooden sleepers on the stabilized ground at a spacing corresponding to the transverse dimensions of the tower. Position the screw bases on the sleepers. Keep the rule of at least two bases on one sleeper.

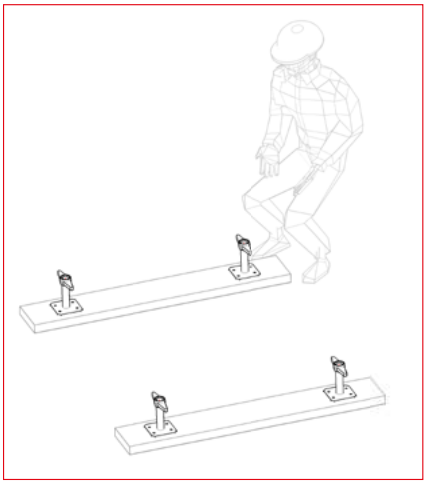

Fig. 4.1

4.2 Mount two 0.7 m frames on the bases, then connect them with a horizontal brace and a transom.

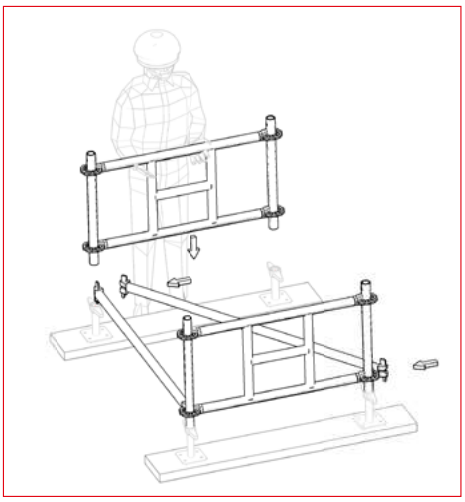

Fig. 4.2

4.3 Attach three transoms to the assembly in Fig. 4.2 and adjust the vertical and horizontal position of the assembly. Use the base nuts for adjustment. Install four base connectors to avoid losing the bases during transport by crane.

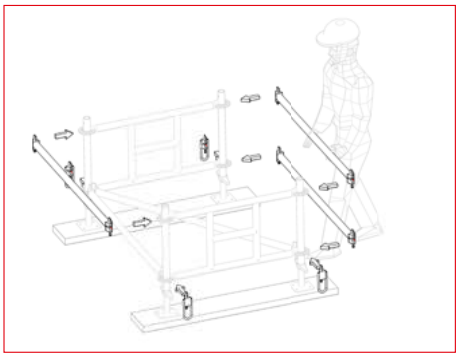

Fig. 4.3

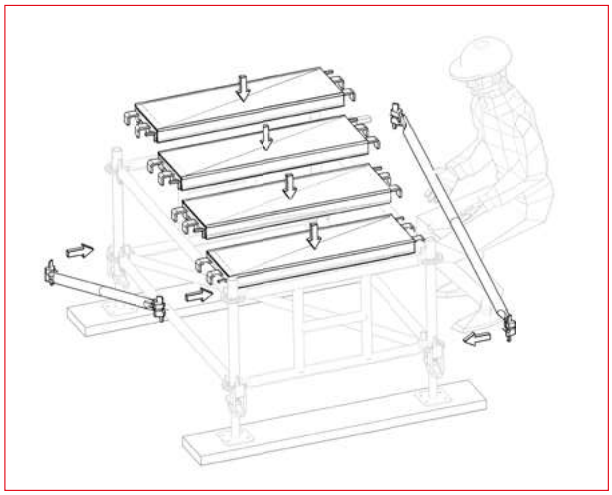

Fig. 4.4

4.4 Attach two braces and four platforms to the assembly in Fig. 4.3.

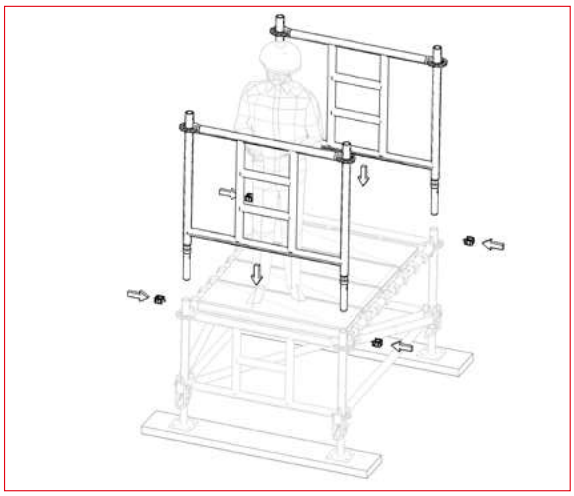

Fig. 4.5

4.5 Attach two frames and four cotters to the assembly in Fig. 4.4.

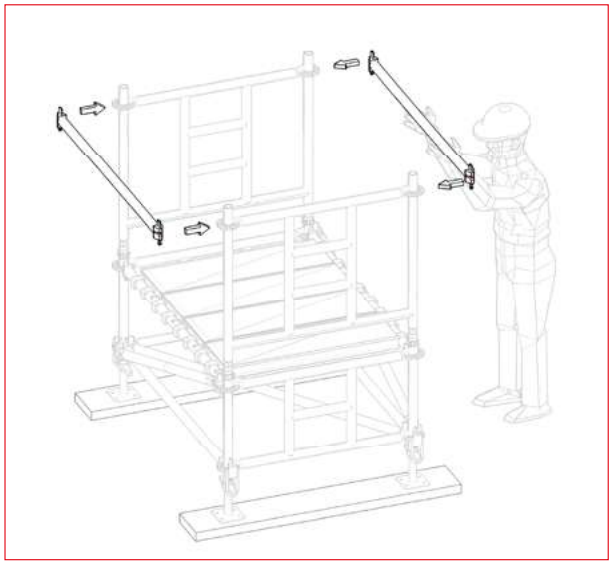

Fig. 4.6

4.6 Attach two transoms to the nodes.

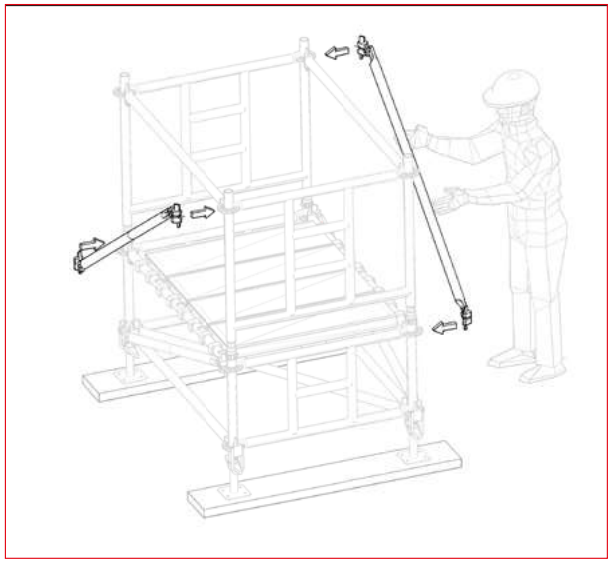

Fig. 4.7

4.7 Attach two braces on the opposite sides.

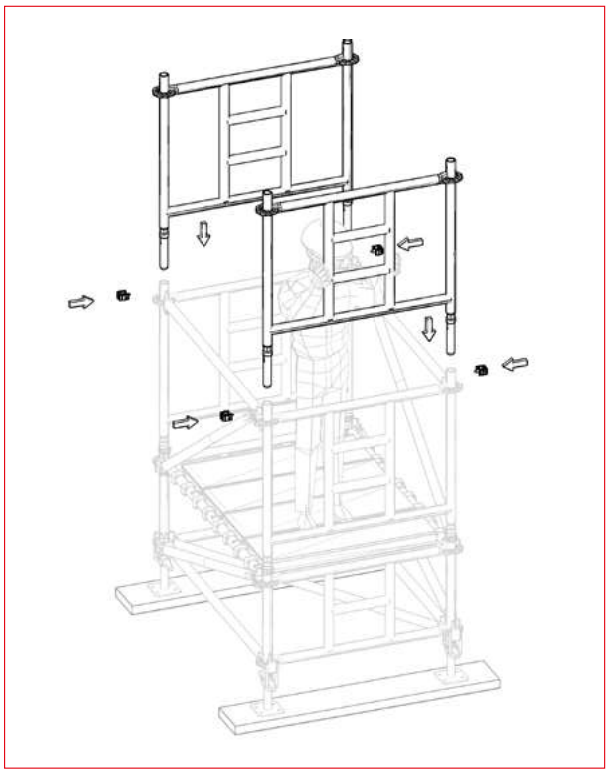

Fig. 4.8

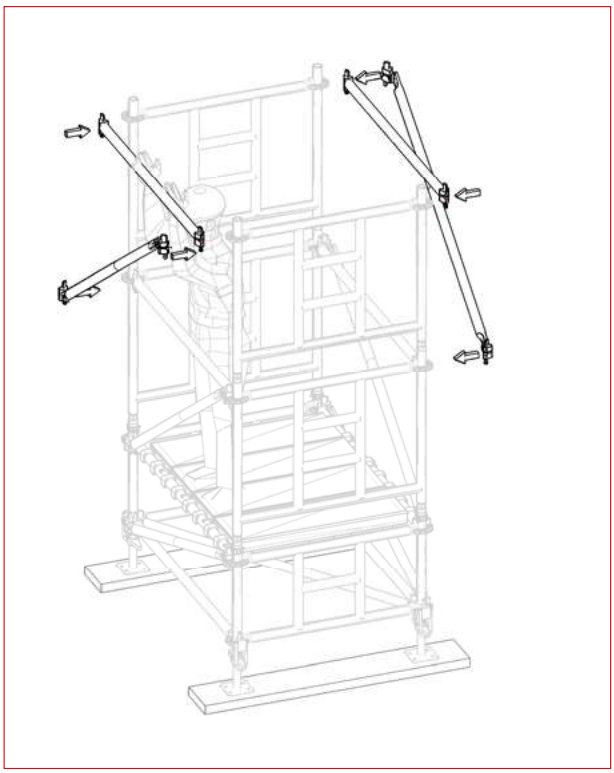

Fig. 4.9

4.8 Install two frames of the next level and the four cotters connecting the frames.

4.9 Install two horizontal transoms, then brace the second level of the frames.

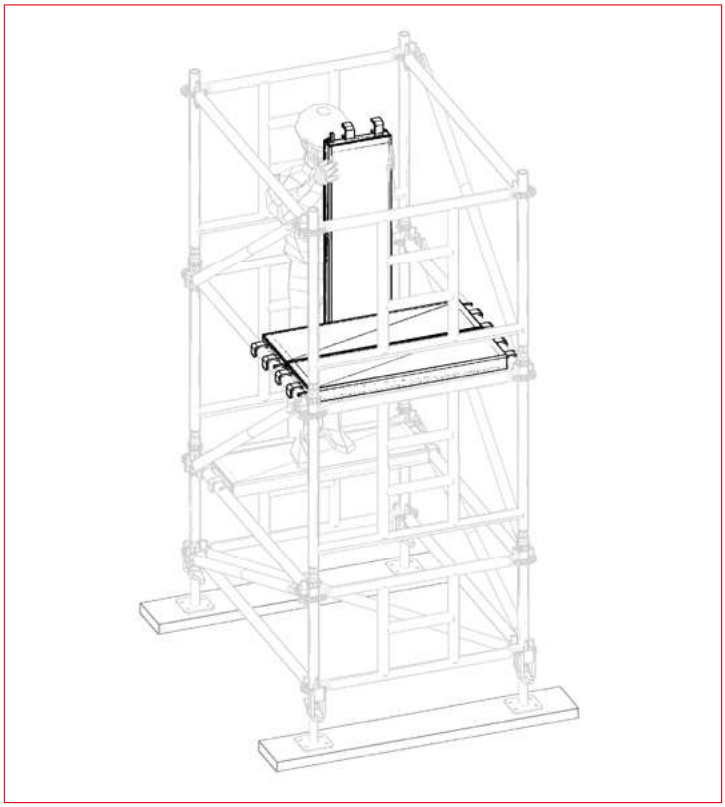

Fig. 4.10

4.10 Standing on the platform of the first level, move the steel platforms from the first level position to the second level and install them as shown in the figure.

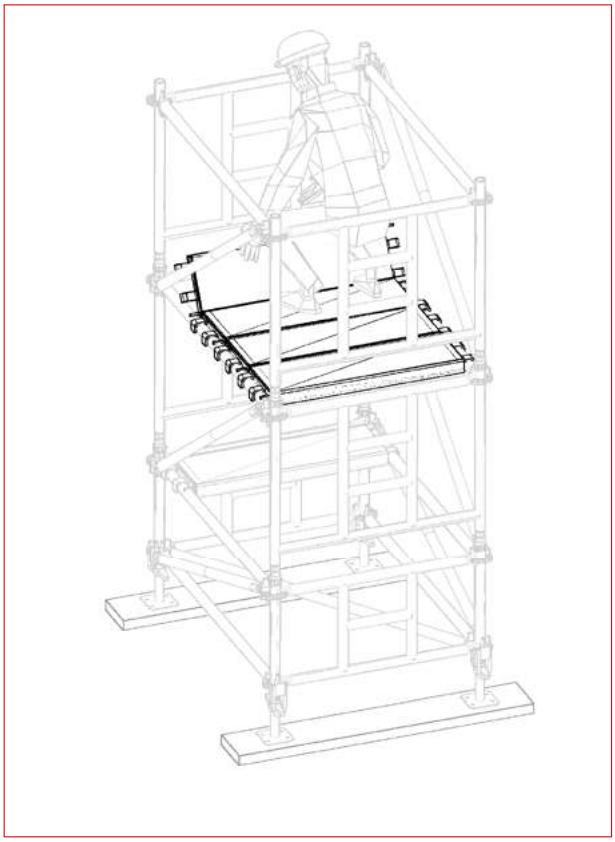

Fig. 4.11

4.11 Climb onto the second level platform and fill the gap with the last platform, creating a safe surface for further work.

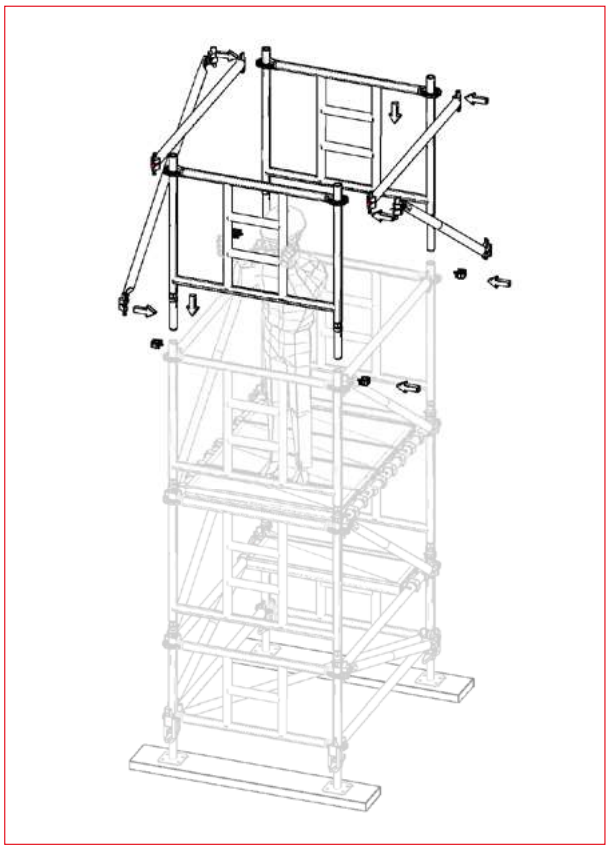

Fig. 4.12

4.12 Standing on the platform, install two frames of the next level, connect them with horizontal transoms and install four cotters. Install the braces on two opposite walls of the tower.

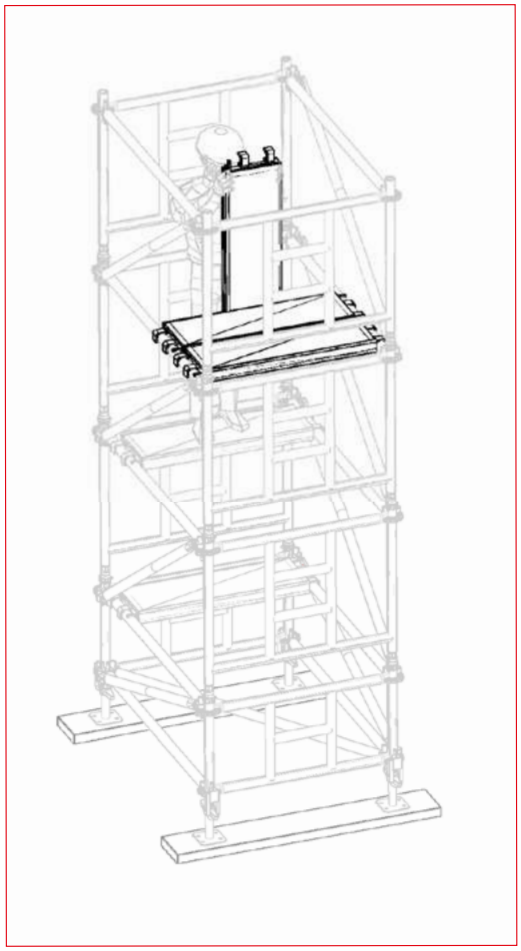

Fig. 4.13

4.13 Proceed in the same way as in sections 4.10 and 4.11 and move the platforms from the second level to the third level, climb onto the platform created in this way and fill the gap with the fourth platform.

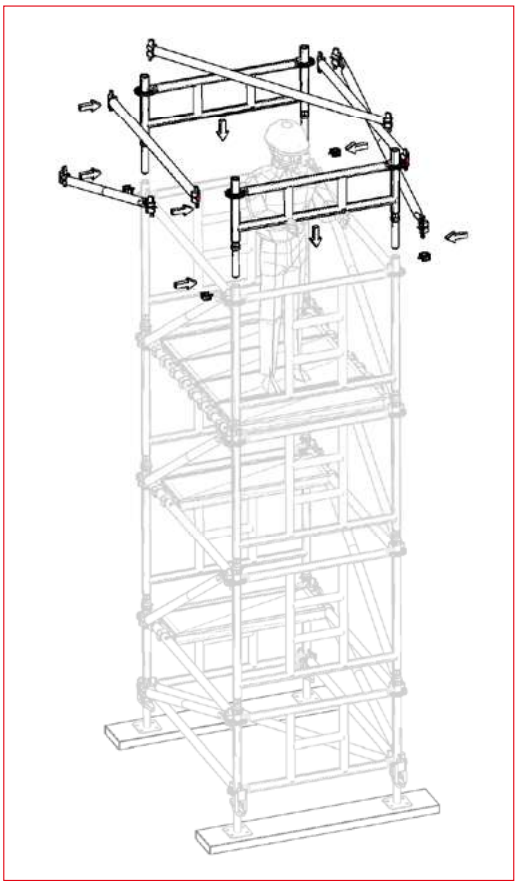

Fig. 4.14

4.14 From the third level install two 0.5 m steel frames, four cotters, two horizontal transoms, one horizontal brace and two vertical braces as shown in the figure.

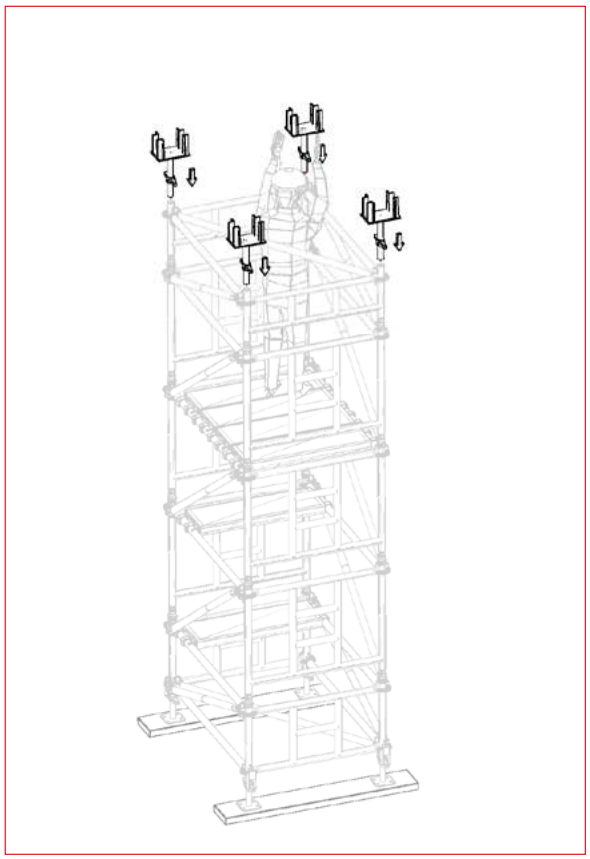

Fig. 4.15

4.15 Install four cross heads into the upper vertical tubes of the frames. Adjust the protrusion of the heads to the desired length according to the height and load capacity tables. Use the nuts for adjustment.

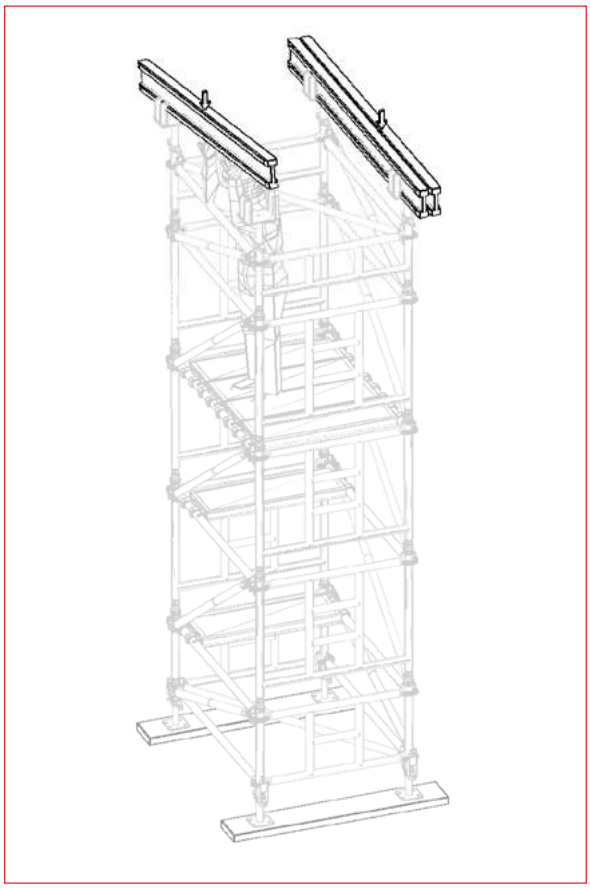

Fig. 4.16

4.16 Mount wooden or steel girders on the cross heads, as needed.

NOTE: Towers should be joined together to increase stability.

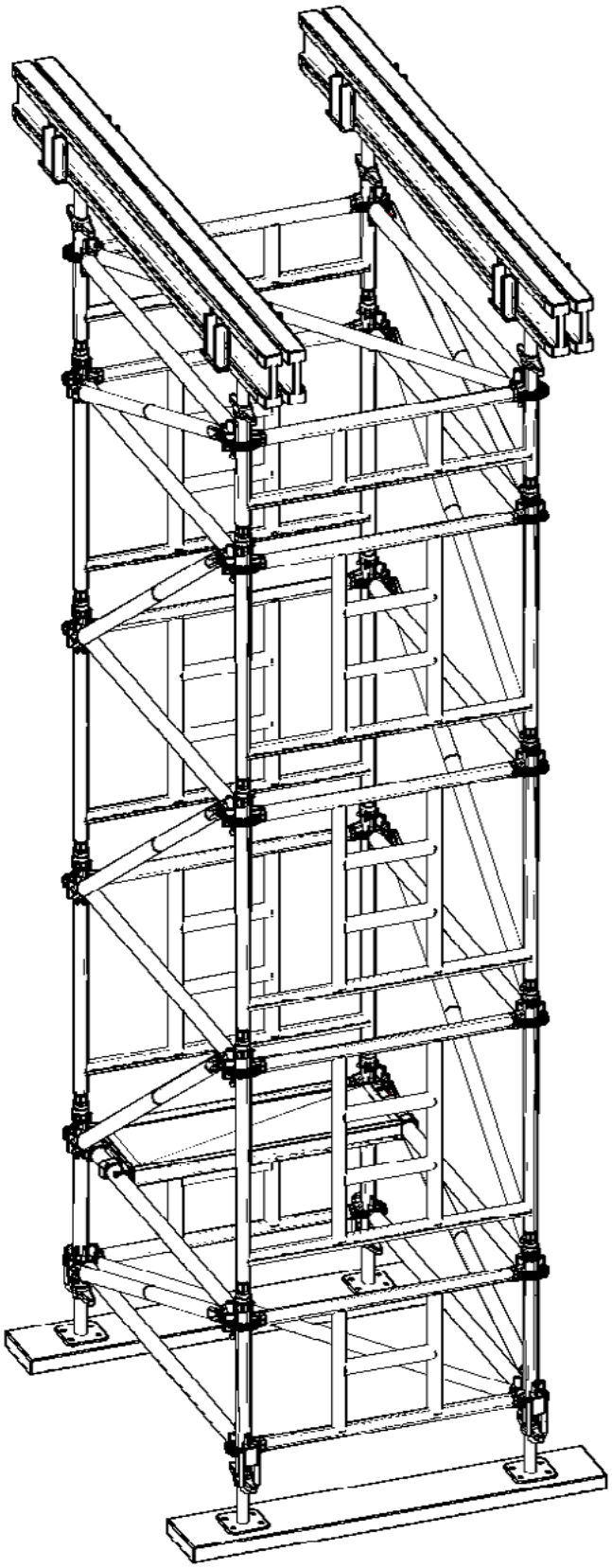

— Example of an installed support tower with frames H = 1 m

— Frame H = 2.0 m Version

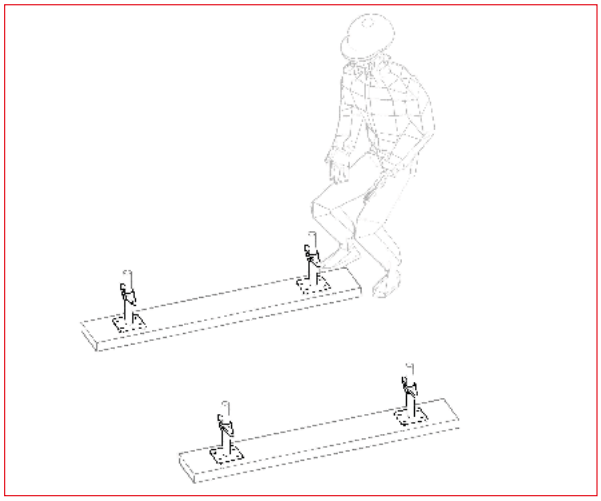

Fig. 4.17

4.17 Lay wooden sleepers on the stabilized ground at a spacing corresponding to the transverse dimensions of the tower. Position the screw bases on the sleepers. Keep the rule of at least two bases on one sleeper.

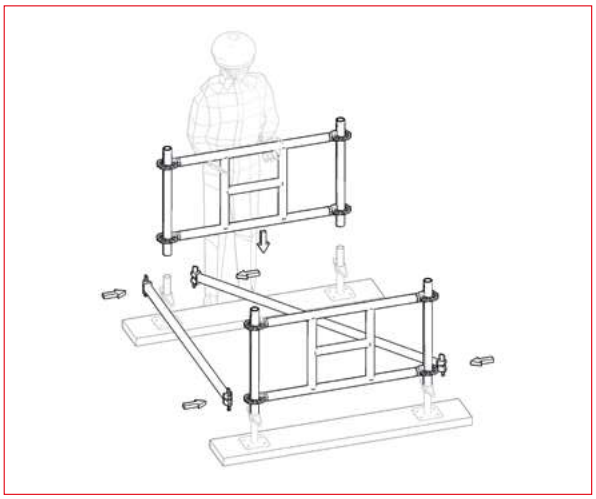

Fig. 4.18

4.18 Mount two 0.7 m frames on the bases, then connect them with a horizontal brace and a transom.

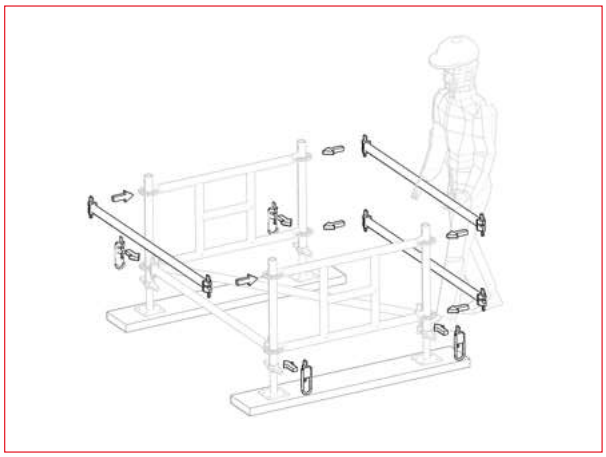

Fig. 4.19

4.19 Attach three transoms to the assembly in Fig. 5.18 and adjust the vertical and horizontal position of the assembly. Use the base nuts for adjustment. Install four base connectors to avoid losing the bases during transport by crane.

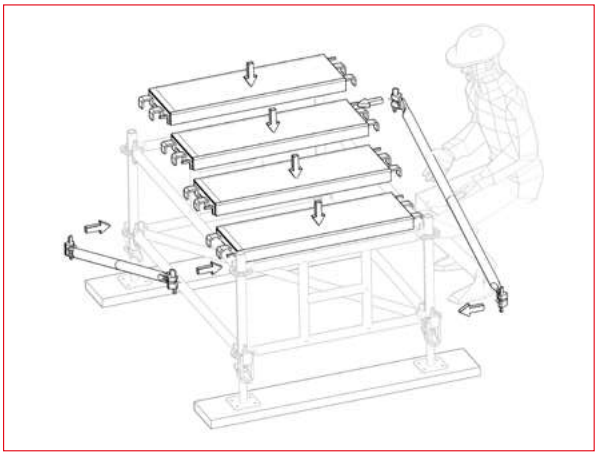

Fig. 4.20

4.20 Attach two braces and four platforms to the assembly in Fig. 4.19.

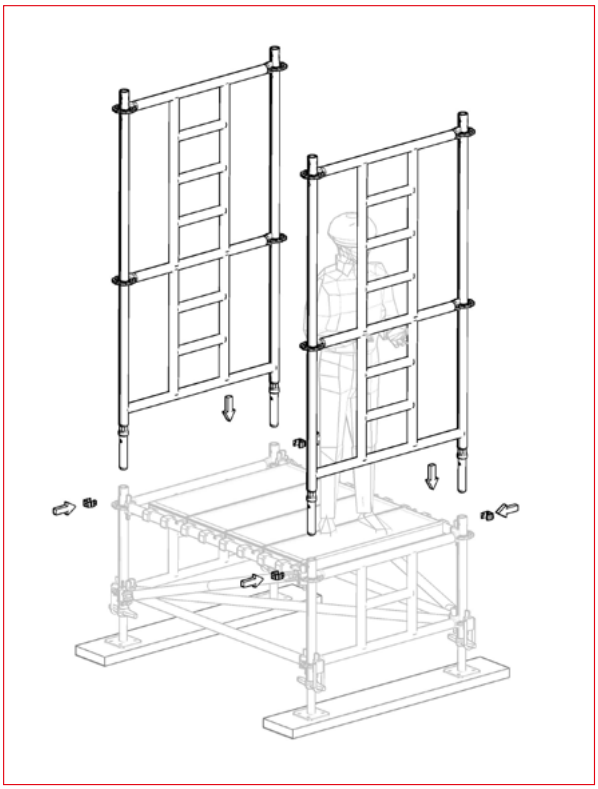

Fig. 4.21

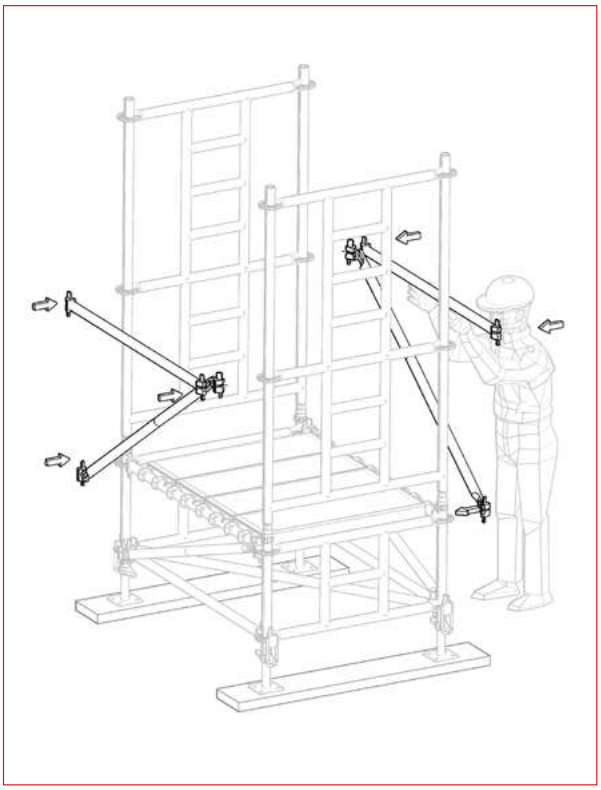

Fig. 4.22

4.21 Attach two 2 m frames and four cotters to the assembly in Fig. 4.20.

4.22 Install two horizontal transoms, then brace the bottom level of the 2 m frames.

Note: Frames that are 2.0 m high should be installed by two persons.

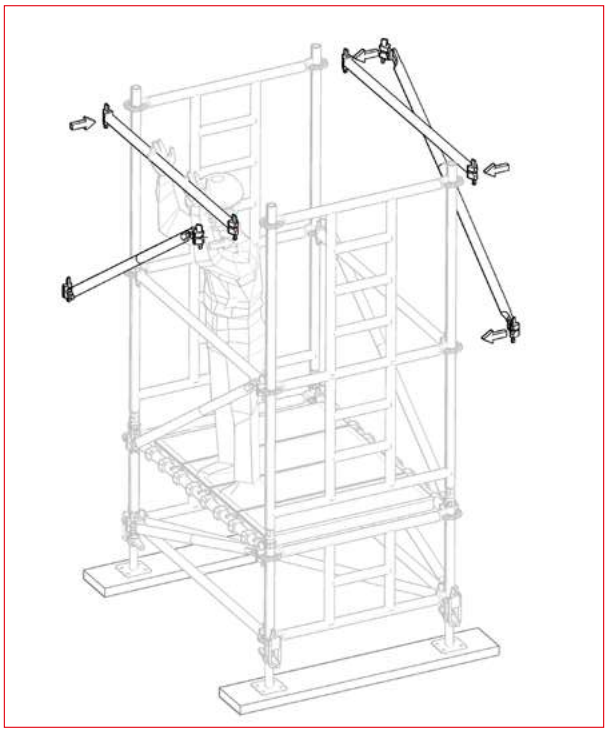

Fig. 4.23

4.23 Install two horizontal transoms, then brace the top level of the 2 m frames.

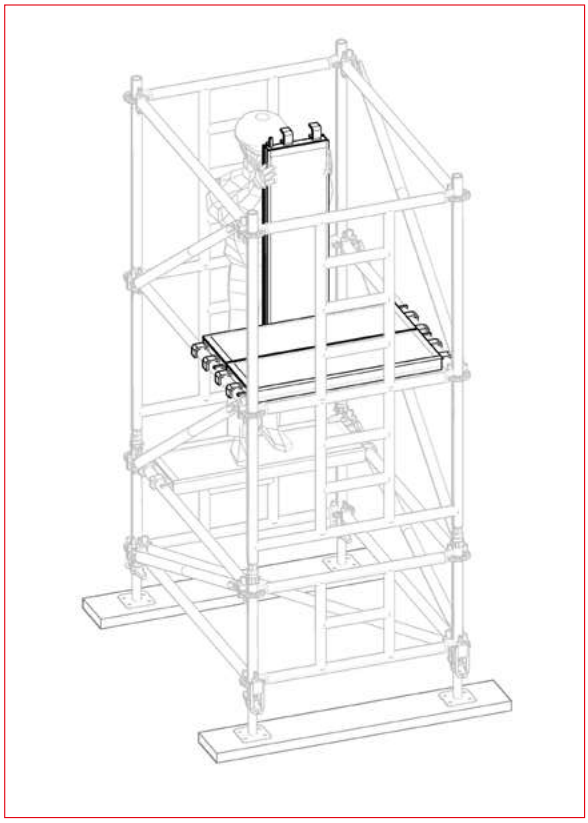

Fig. 4.24

4.24 Standing on the platform of the first level, move the steel platforms from the first level position to the second level and install them as shown in the figure.

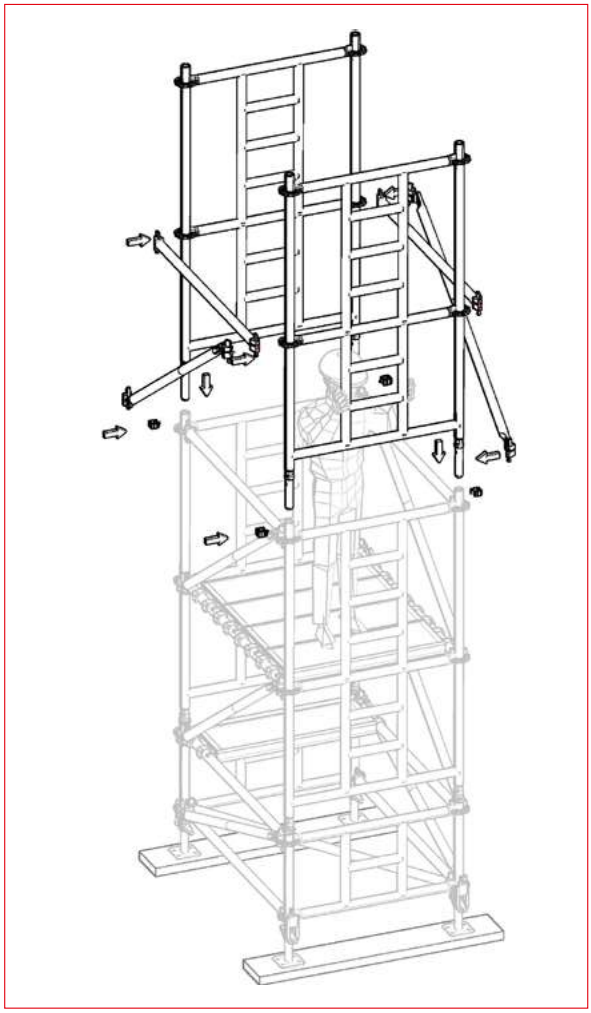

Fig. 4.25

4.25 Fasten two 2 m frames and four cotters to the assembly in Fig. 4.24. Install two horizontal transoms, then brace the bottom level of the frames on the installed level as shown in the figure.

Note: Frames that are 2.0 m high should be installed by two persons.

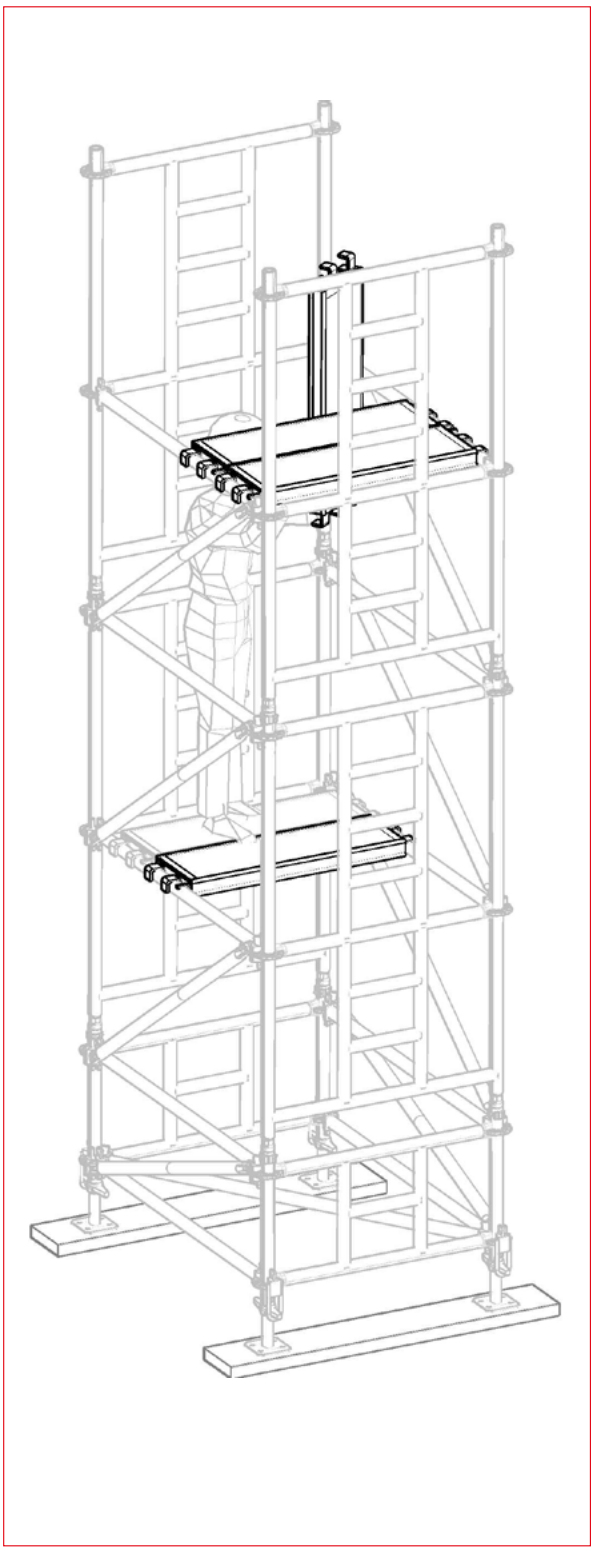

Fig. 4.26

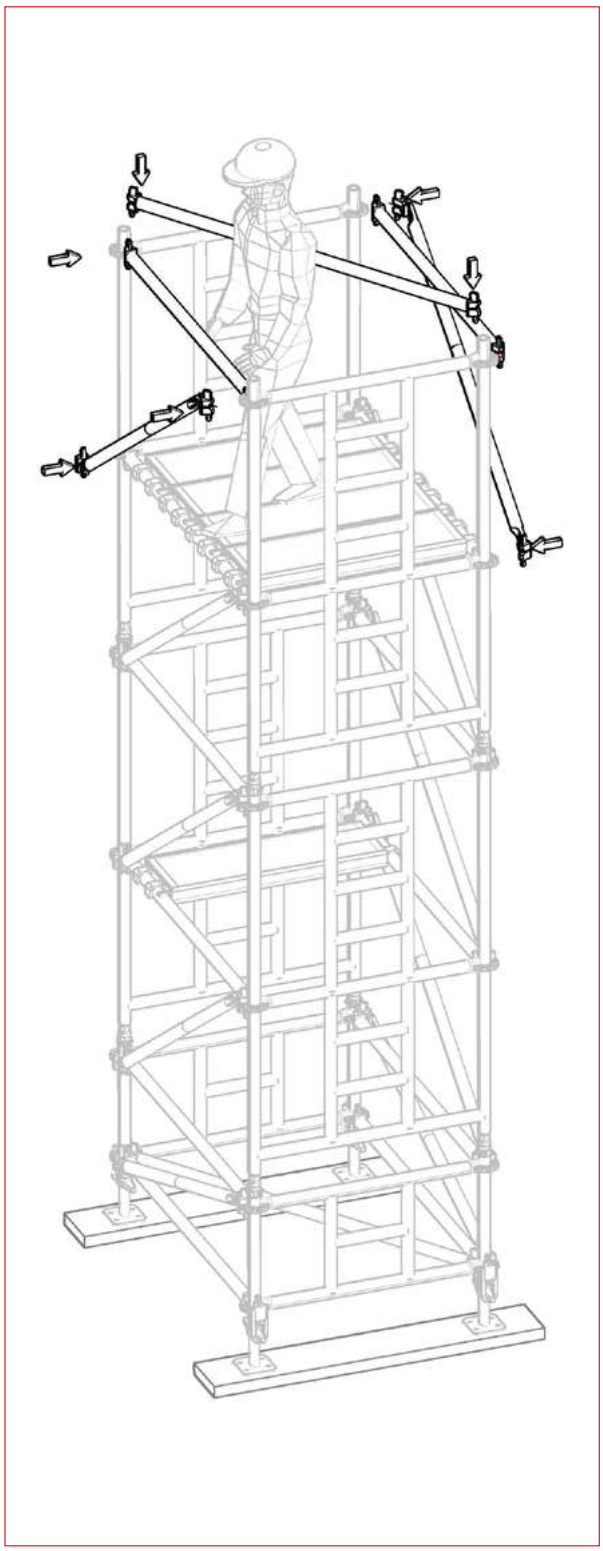

Fig. 4.27

4.26 Standing on the platform move the steel platforms from the bottom position to the upper position of the top level and install them as shown in the figure.

4.27 Climb onto the created platform and install two horizontal transoms, two vertical braces and a horizontal brace of the top level as shown in the figure

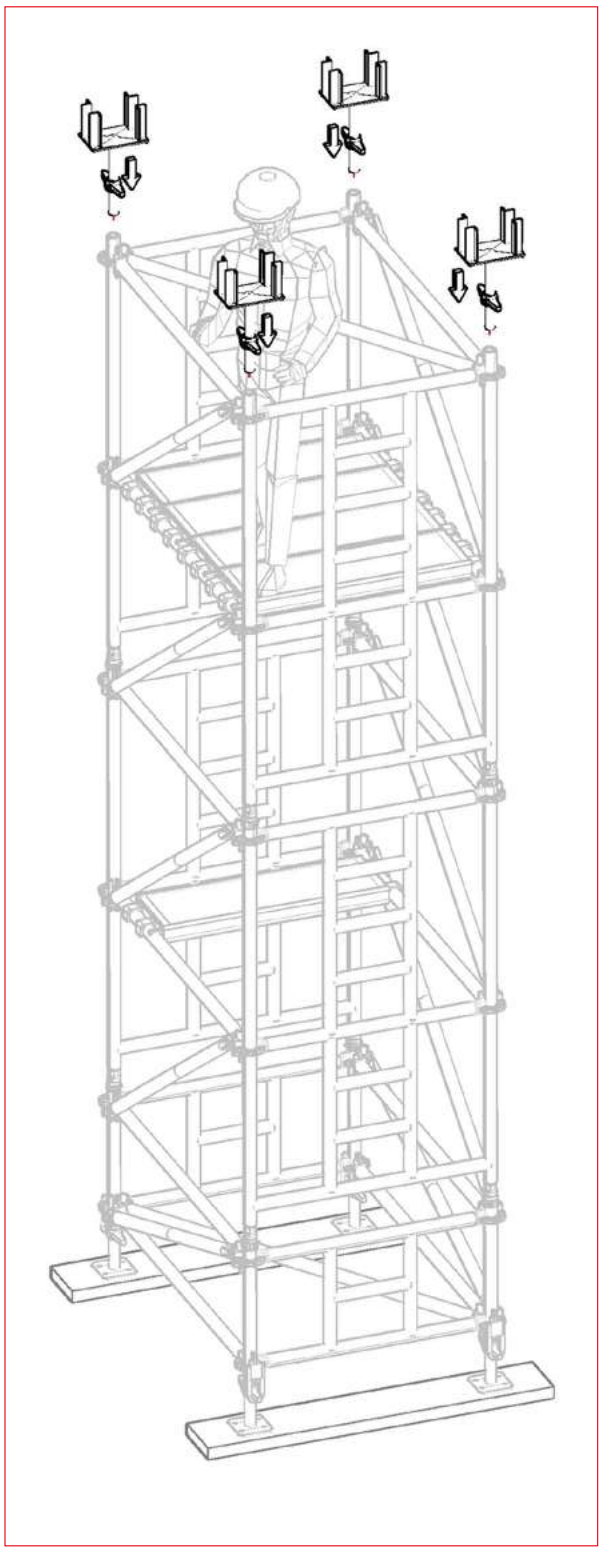

Fig. 4.28

4.28 Install four heads from the created platform, as shown in the figure.

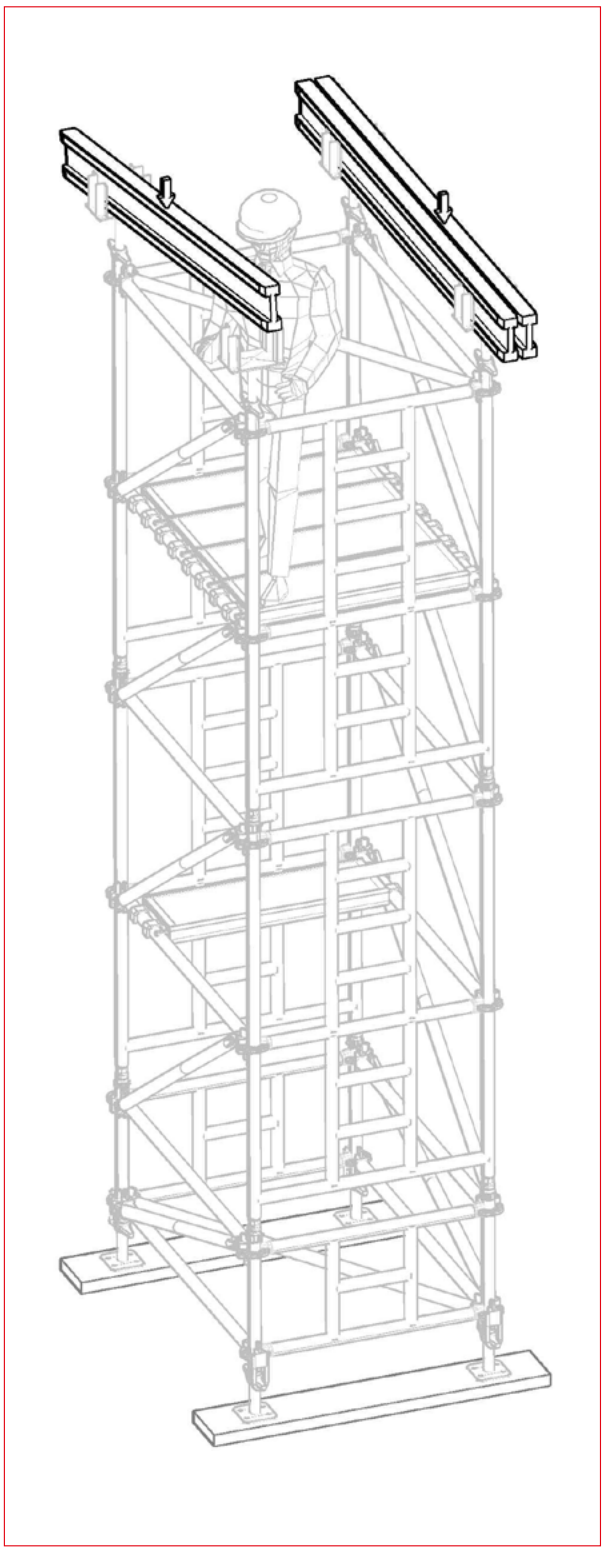

Fig. 4.29

4.29 Mount wooden or steel girders on the cross heads, as needed

5. HORIZONTAL AST109 TOWER INSTALLATION

The design of the AST109 towers allows you to install all available configurations in a horizontal position.

The installation sequence does not differ significantly from the installation shown in the previous chapter. The structure is supported on wooden sleepers, slightly elevated above the ground level to facilitate the installation of the components as the installation progresses.

This installation method avoids the risk of the installer falling from a height. When the tower component installation is complete lift the tower with a crane to the working position. Before you lift the assembly check that all required cotters have been installed and the bases protrude to the same length. The bases should be secured against falling out of the lower frames by installing the base connectors. To precisely determine the tower height adjust the nuts of the bases and the nuts of the cross heads.

If work at height is required later, when the tower has been lifted to the working position, install the steel platforms at the desired level.

— Example of horizontal installation

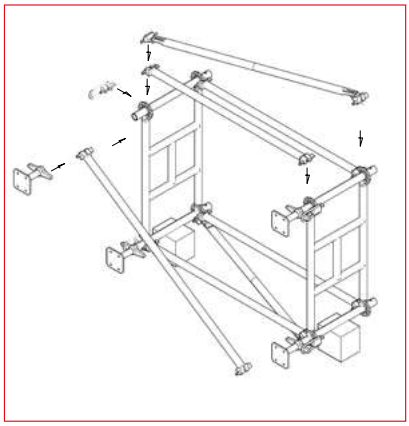

Base structure installation *Fig. 5.1*

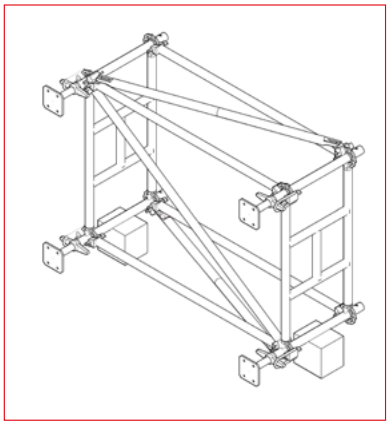

View of installed base structure *Fig. 5.2*

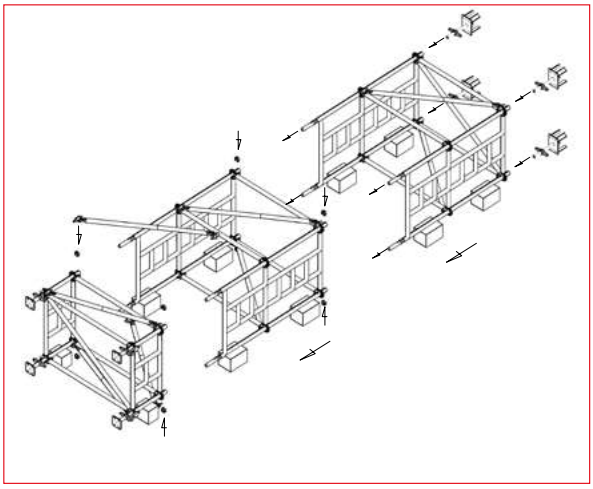

Base structure + frame of h-2.0 m installation *Fig. 5.3*

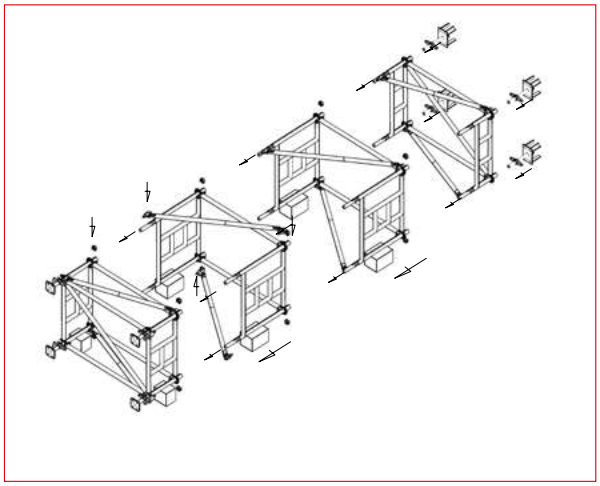

Base structure + frame of h-1.0 m and h-0.5 m installation *Fig. 5.4*

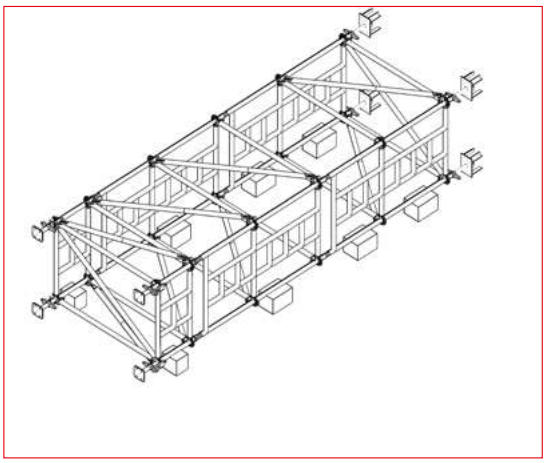

Horizontal view of the whole structure, frames of h - 2.0 m *Fig. 5.5*

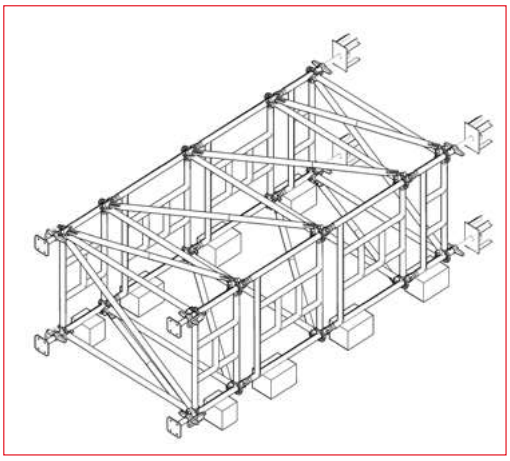

Horizontal view of the whole structure, frames of h - 1.0 m *Fig. 5.6*

6. AST109 SUPPORT TOWER REMOVAL

The tower can be removed after removing the load acting on the tower structure. The load is relieved by lowering the cross heads. Do not relieve the towers by lowering the base nuts. This may cause the tower to topple over or stresses to rise beyond those permitted for the interconnected towers.

7. AST109 TOWER SYSTEM COMPONENTS

7.1 Steel frame 0.5 x 1.09 m

The top steel frame that forms the top end of the AST109 tower. Equipped with pilot pipes for vertical connection to the lower level. Installed on the last floor of the tower.

Part number	Weight (kg)
A 52 10 109	13.51

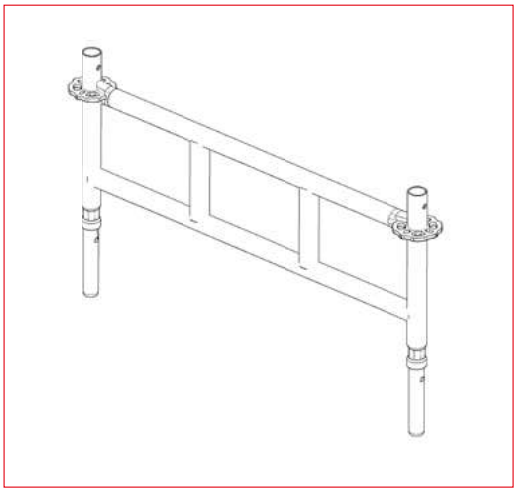

Fig. 7.1

7.2 Steel frame 1.0 x 1.09 m

Basic frame that forms the main body of the AST109 tower. Equipped with pilot pipes for vertical connection of successive levels. Installed in the middle section of the tower assembly.

Fig. 7.2

Part number	Weight (kg)
A 52 11 109	21.25

7.3 Steel frame 2.0 x 1.09 m (installed by two people)

Basic frame that forms the main body of the AST109 tower. It is an alternative to two 1.0x1.09 m frames. Equipped with pilot pipes for vertical connection of successive levels. Installed in the middle section of the tower assembly.

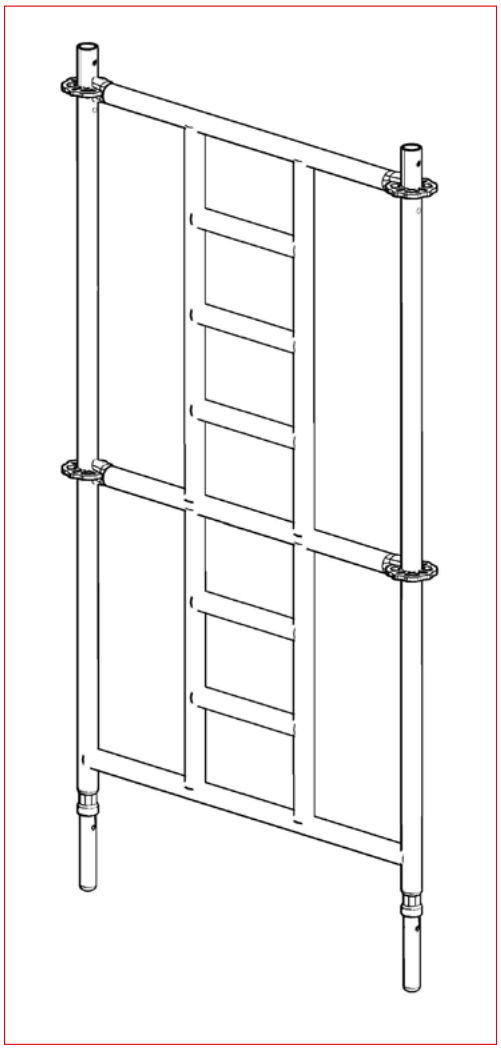

Fig. 7.3

Part number	Weight (kg)
A 52 21 109	40.30

7.4 Steel frame 0.71 x 1.09 m

The bottom steel frame that forms the body base of the AST109 tower. The bottom section works with the bases, the top section works with the pilot pipes of the higher level frames. Installed in the bottom section of the tower assembly.

Part number	Weight (kg)
A 52 12 109	17,46

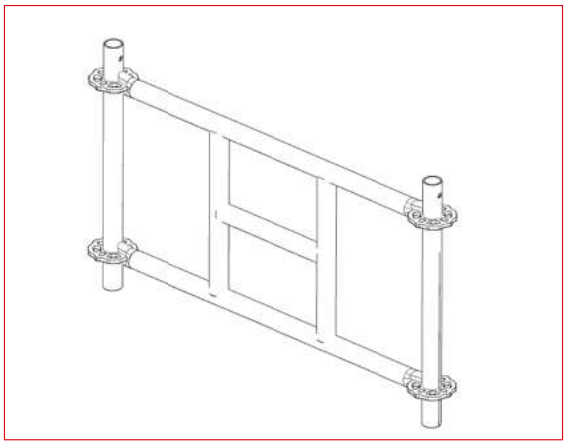

Fig. 7.4

7.5 Adjustable base 0.6 m

The steel base transfers the entire load from the AST109 tower to the ground. Ensures vertical adjustment between 0÷40 cm. A threaded rod acts as a load-bearing component. Works with the 0.71 x 1.09 m frame. Installed in the bottom section of the tower assembly.

Part number	Weight (kg)
A 52 01 060	6.49

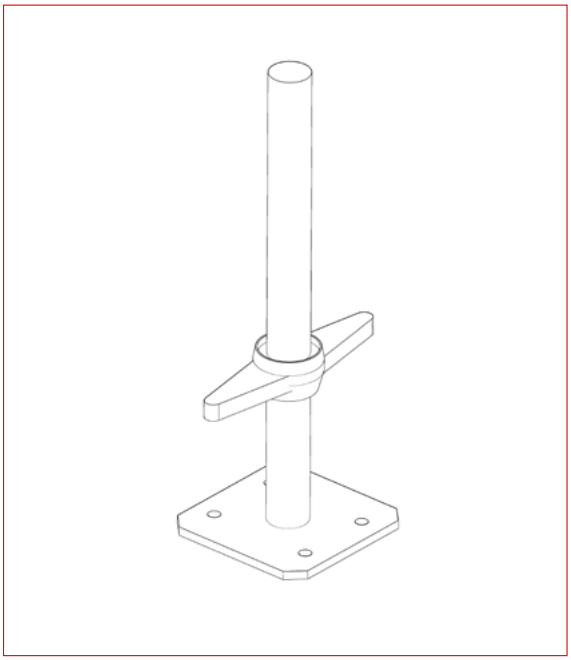

Fig. 7.5

7.6 Cross threaded head 0.45 m

The head transfers the loads from the object to the AST109 towers through the support girders. Ensures vertical adjustment between 0÷25 cm. A threaded rod acts as a load-bearing component. Works with the 0.5 x 1.09 m frame. Installed in the top section of the tower assembly.

Part number	Weight (kg)
A 52 02 045	10.98

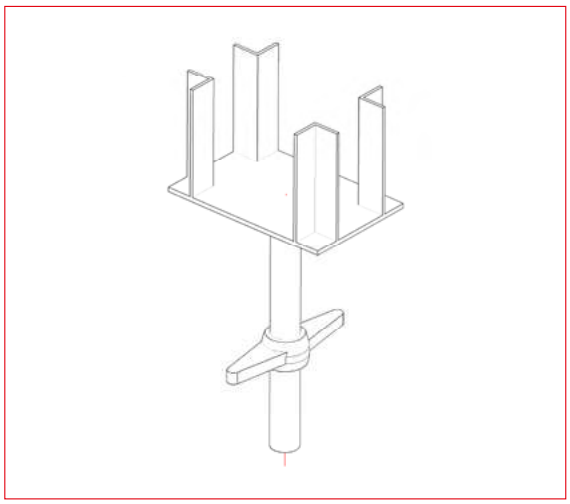

Fig. 7.6

7.7 Cotter

A spring component that protects the frames installed on subsequent levels against disconnection. Works with all frames. Installed at the pipe-pivot connection.

Part number	Weight (kg)
MP-112	0.1

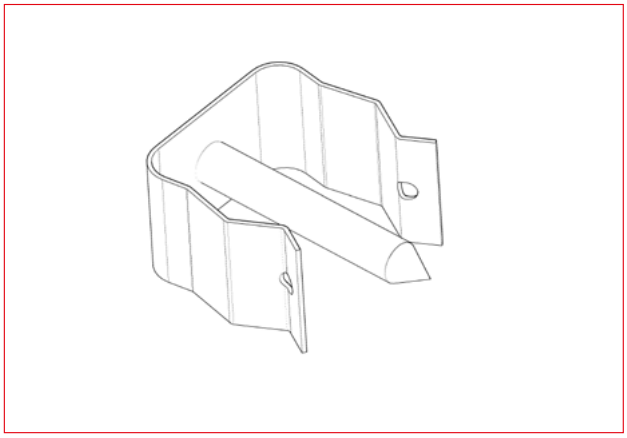

Fig. 7.7

7.8 Base connector

A spring component that protects the frames installed on subsequent levels against disconnection. Works with all frames. Installed at the pipe-pivot connection.

Part number	Weight (kg)
A 52 01 001	0.87

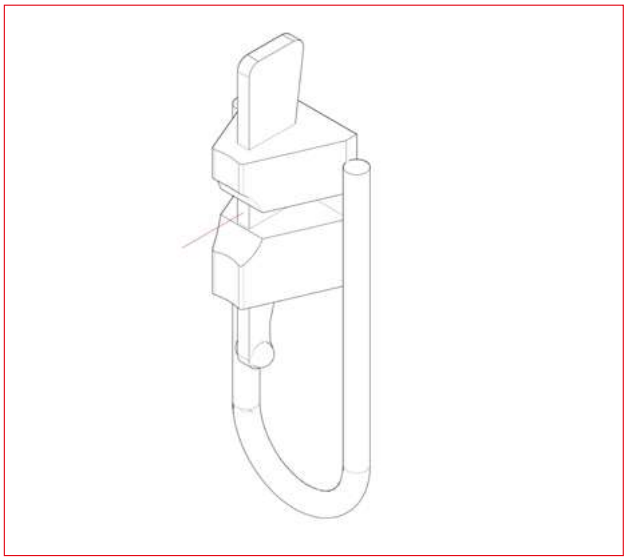

Fig. 7.8

7.9 O-transoms

A set of connecting components used to obtain the appropriate frame spacing. The components are used to obtain the longitudinal dimension of the cross-section of the towers. They also act as supports for the auxiliary installation platforms. They come in 5 lengths. Installed at vertical spacings of 0.5 m and 1.0 m in the tower structure.

Part number		Weight (kg)
E 37 18 10	O-transoms 1.09 m	4.56
E 37 18 15	O-transoms 1.57 m	5.56
E 37 18 20	O-transoms 2.07 m	7.08
E 37 18 25	O-transoms 2.57 m	9.07
E 37 18 30	O-transoms 3.07 m	10.10

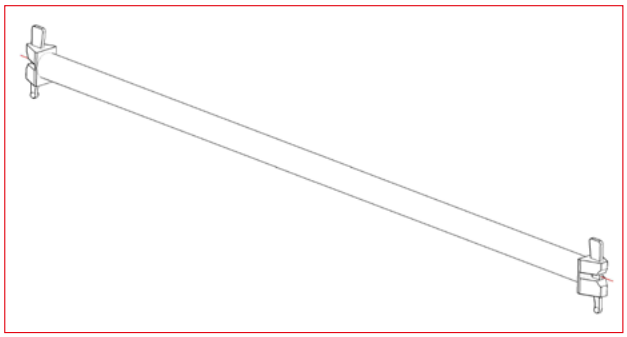

Fig. 7.9

7.10 Vertical braces

A set of components connecting frame nodes diagonally in a vertical plane. The components make the tower grid vertically rigid. They are installed on the side walls along the length of the tower between the frames. They come in 10 lengths.

Part number	L x H (m)	Weight (kg)
E 37 32 10	1.09 x 1.0	5.79
E 37 32 11	1.09 x 0.5	4.87
E 37 32 15	1.57 x 1.0	6.86
E 37 32 16	1.57 x 0.5	6.18
E 37 32 20	2.07 x 1.0	8.12
E 37 32 21	2.07 x 0.5	7.59
E 37 32 25	2.57 x 1.0	9.46
E 37 32 26	2.57 x 0.5	9.03
E 37 32 30	3.07 x 1.0	10.83
E 37 32 31	3.07 x 0.5	10.48

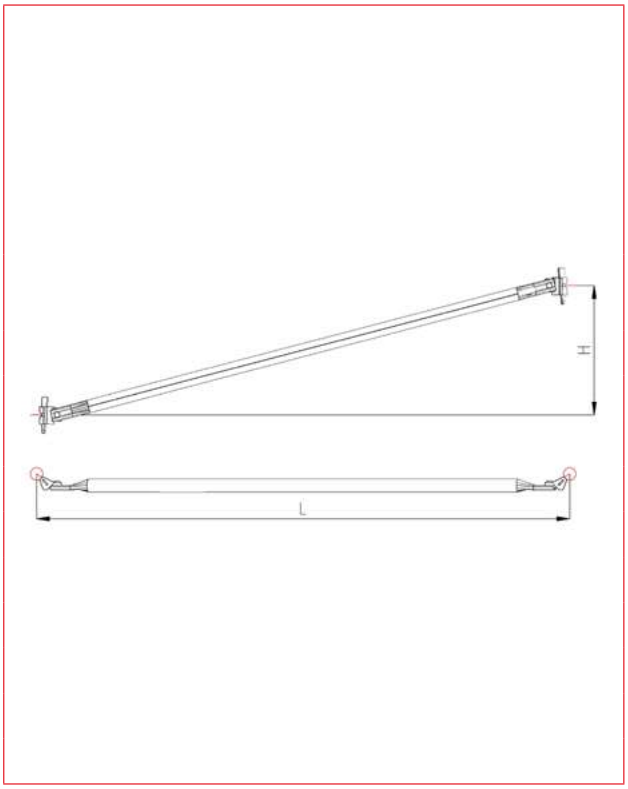

Fig. 7.10

7.11 Horizontal braces

A set of components connecting frame nodes diagonally in a horizontal plane. The components make the tower grid horizontally rigid. They are installed on the lower and upper frames of the tower. They come in 5 lengths.

Part number	A x B (m)	Weight (kg)
A 52 08 100	1.09 x 1.09	6.16
A 52 08 150	1.09 x 1.57	7.52
A 52 08 200	1.09 x 2.07	9.08
A 52 08 250	1.09 x 2.57	10.71
A 52 08 300	1.09 x 3.07	12.47

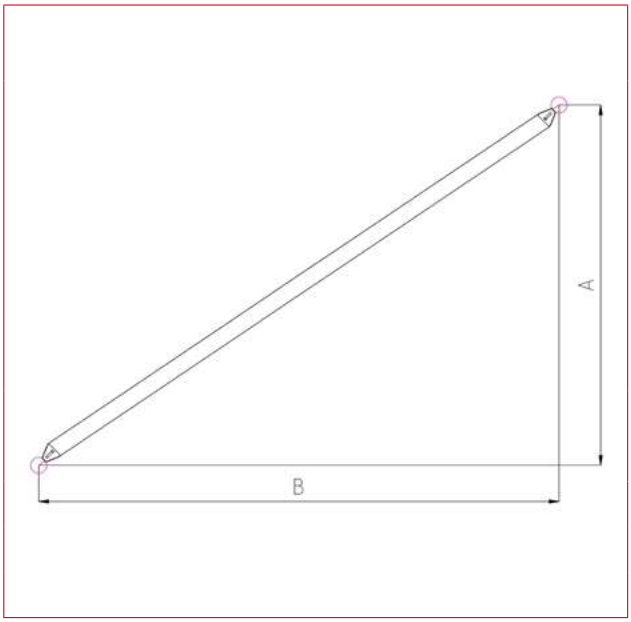

Fig. 7.11

7.12 Single platform

An component that forms an auxiliary platform for installation safety and convenience. When the tower installation is complete the component is removed from the structure.

Part number	Weight (kg)
E 49 59 10	9.53

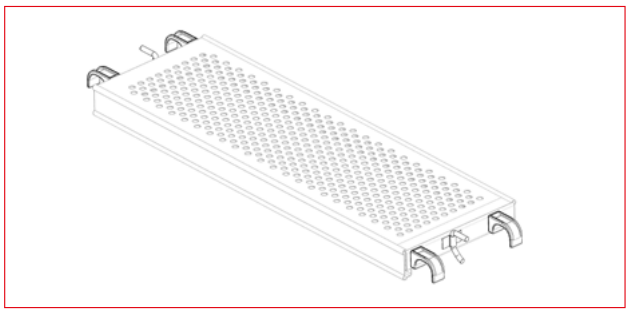

Fig. 7.12

7.13 Standard steel pipes

Steel pipes of various lengths that allow you to connect the AST109 towers into large structural systems while making the towers rigid between each other.

Diameter dimension: **Ø 48,3 x 3,2 x L**
Material: **S235JRH**

Part number	Length (m)	Wag (kg)
E 44 05 05	0.5	1.78
E 44 05 10	1.0	3.56
E 44 05 15	1.5	5. 34
E 44 05 20	2.0	7.12
E 44 05 25	2.5	8.90
E 44 05 30	3.0	10.68
E 44 05 35	3.5	12.46
E 44 05 40	4.0	14.24
E 44 05 50	5.0	17.80
E 44 05 60	6.0	21.36

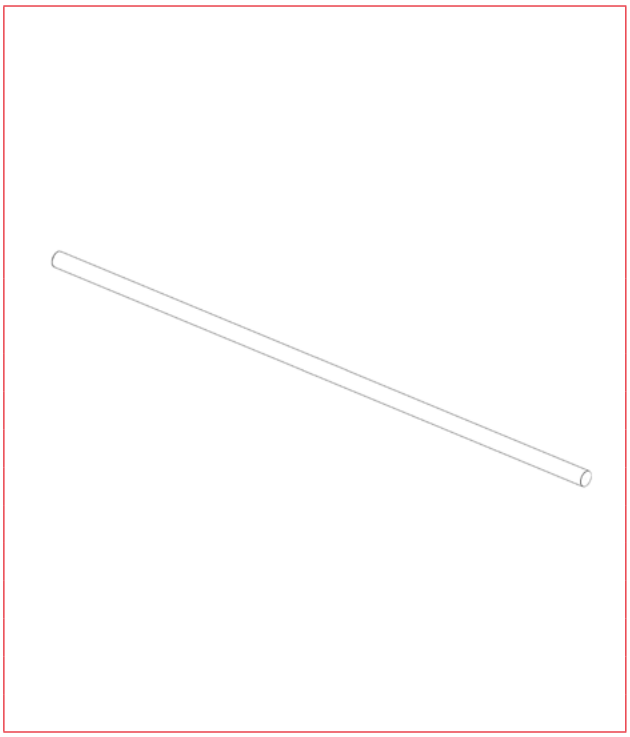

Fig. 7.13

8. CONNECTORS

8.1 Regular connector

The fastener that allows you to connect standard pipes at an angle of 90°.

Part number	Weight (kg)
E 58 11 19	1.3

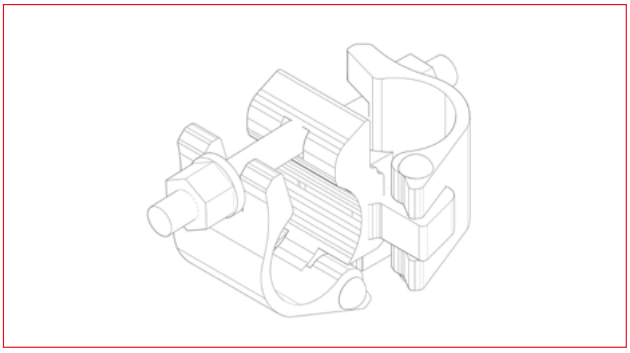

Fig. 8.1

8.2 Swivel connector

The fastener that allows you to connect standard pipes at any angle Equipped with single clamps pivotally connected with a Ø 16 mm rivet.

Part numberw	Weight (kg)
E 58 13 19	1.2

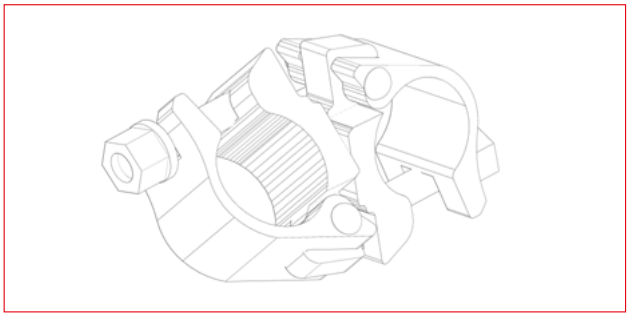

Fig. 8.2

8.3 Longitudinal connector

The fastener that allows you to connect standard pipes longitudinally Equipped with two single clamps fastened on a common base set in series.

Part number	Weight (kg)
E 58 14 19	1.5

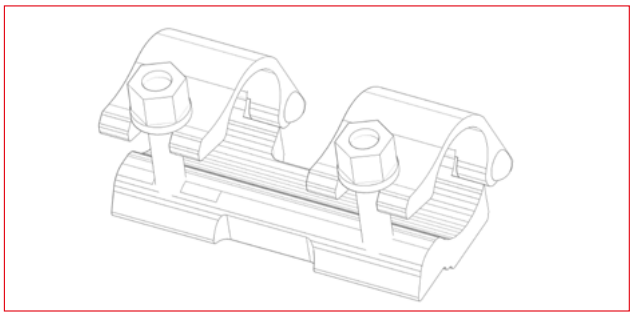

Fig. 8.3

8.4 Double wedge connector

Used to connect the frame racks in close proximity directly at the nodes. The connection is made by driving the wedges into the node discs of the frames.

Part number	Weight (kg)
E 37 39 00	1.36

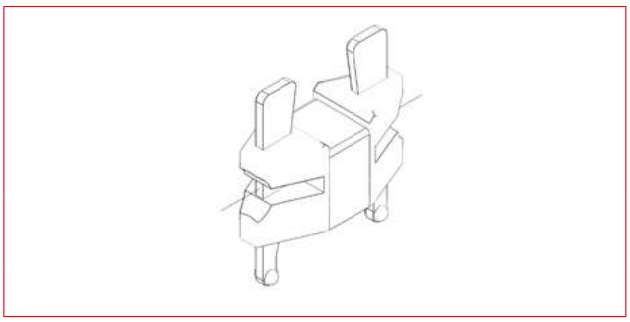

Fig. 8.4

8.5 Wedge swivel connector

Used to connect the frame racks to standard pipes to create a larger assembly of interconnected towers. Allows you to create braces.

Part number	Weight (kg)
E 37 30 01	1.21

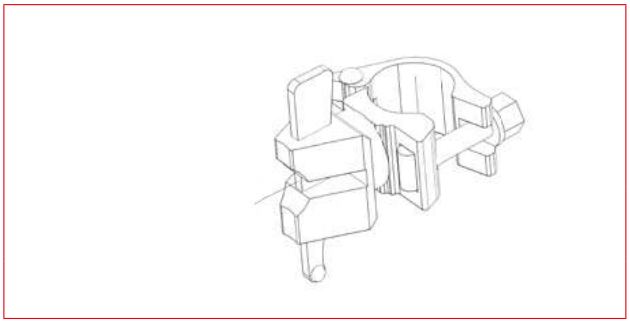

Fig. 8.5

8.6 Regular wedge connector

Used to connect vertical pipes of the frames with horizontal pipes connecting single towers into larger load-bearing assemblies.

Part number	Weight (kg)
E 37 39 01	1.22

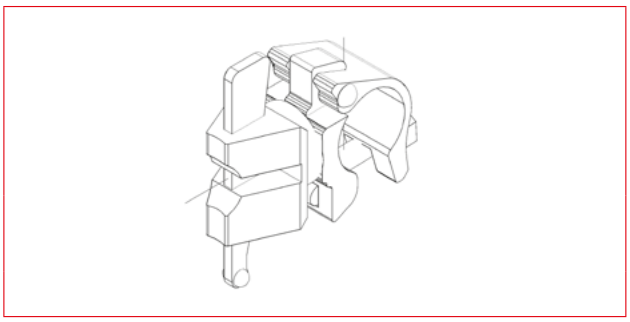

Fig. 8.6

PART II - SUPPORT TOWERS AST109 - TECHNICAL DETAILS

1. INTRODUCTION

AST109 towers are prepared for individual users as well as for specialized construction companies that act as an industrial contractor.

They were created assuming a design of a structure that would bear heavy loads at high altitudes.

Their special design features allow the towers to work with the modular rack scaffolding system as well as support each other with the components common to the support tower system and Rotax/Futuro rack scaffoldings manufactured by Altrad.

All components of the support towers system are made of high-quality steel, galvanized by hot dip galvanizing which gives them special resistance to corrosion and external weather conditions.

The basic shape of the cross-section of the towers is square but we can obtain rectangular cross-sections of the towers using horizontal components of a length available for the rack scaffolding system. Please note that one dimension of the tower cross-section is always constant and equals to 1.09 m.

The AST109 towers presented in the document meet the requirements of the following standards:
PN-EN 12812 and PN-EN12813.

1.1 Basic Information

All calculations were made using AUTODESK ALGOR SIMULATION 2011 based on the Finite Element Method. The calculations include material (non-linear characteristics of materials and connector stiffness) and geometric (large displacements) non-linearity. The calculations were carried out in class B1 in accordance with the requirements of the PN-EN 12812.

The materials of individual components were modelled in numerical simulations using a non-linear linearly reinforced Mises model.

Three static schemes of the towers were considered in the calculations:
- locked head towers
- free towers
- towers at Installation

For each scheme four levels of base and head protrusion were analysed: 10 cm, 30 cm, 50 cm and 65 cm in fixed ratios of 60% (base protrusion) to 40% (head protrusion). The analyses covered five variants of bay lengths: 1.088 m, 1.572 m, 2.072 m, 2.572 m and 3,072 m. The frame width of 1,088 m is constant for all calculation variants. The highest tower installation heights are up to 19 m and the entire set of their data is presented in the tables below.

2. LOADS

The following load forms were taken into account in the individual calculation variants::

- Dead weight resulting from the weight of individual components, given in the list of towers in the following tables.
- Wind load: 4 levels of wind load *q* were considered: 0.0 kN/m², 0.5 kN/m², 0.8 kN/m², 1.1 kN/m². For towers at installation two levels of wind load *q* were considered: 0.1 kN/m², 0.2 kN/m².
- Horizontal load equal to 1% of the vertical load *Fv* applied to each tower rack at the level of the heads.
- Horizontal load *FH*: 5 levels of load applied to each tower rack at the level of the heads were considered: 0.00 kN 0.15 kN, 0.30 kN, 0.45 kN, 0.60 kN.
- Concentrated moment load modelling the eccentric head load..

Tab. 2.1 Load factor values

Factor	Dead weight	Wind load	Horizontal load (1% *Fv*)	Vertical load *Fv*	Horizontal load *FH*
γf	1.35	1.5	1.5	1.5	1.5
γf^*	0.9	1.5	1.5	0.9	1.5
ψ	1.0	1.0	1.0	1.0	1.0

γf^* - load factor for structure stability calculations

The values in the tables do not include the following loads listed in PN-EN 12812 in the form of:

- uneven laying of the mixture(Q4),
- flow pressure (Q6),
- seismic loads (Q7),
- thermal loads (Q8.1),
- setting (Q8.2),
- pre-stresses (Q8.3),
- unusual loads (Q9).

2.1 Wind load

The loads resulting from the action of the wind were applied to the structure of the towers in the form of concentrated forces. The value of the load resulted from the surface area of individual components connected in a given node. The force values for individual tower variants are listed in the tables Tab. 2.2÷Tab. 2.6. The values have been determined for individual nodes, described and shown in Fig. 2.1. The calculations considered two wind load directions: the parallel direction and the perpendicular direction.

a)

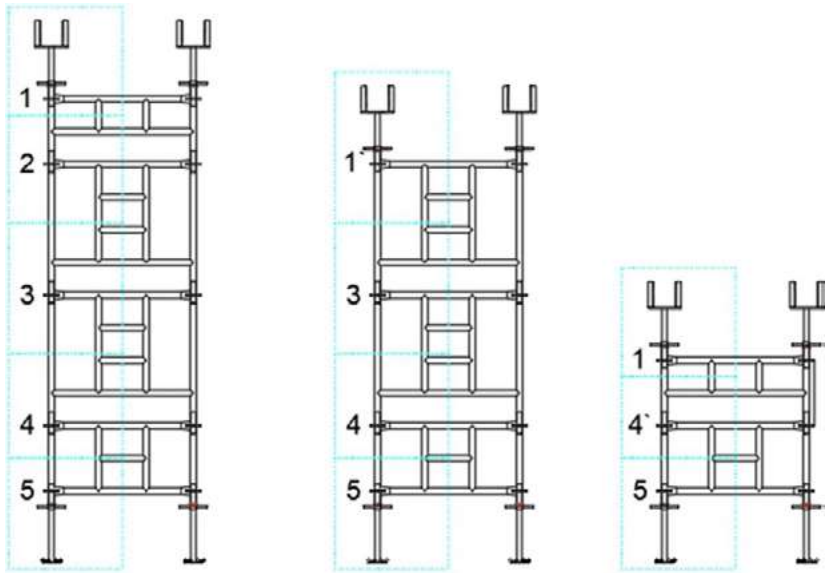

b)

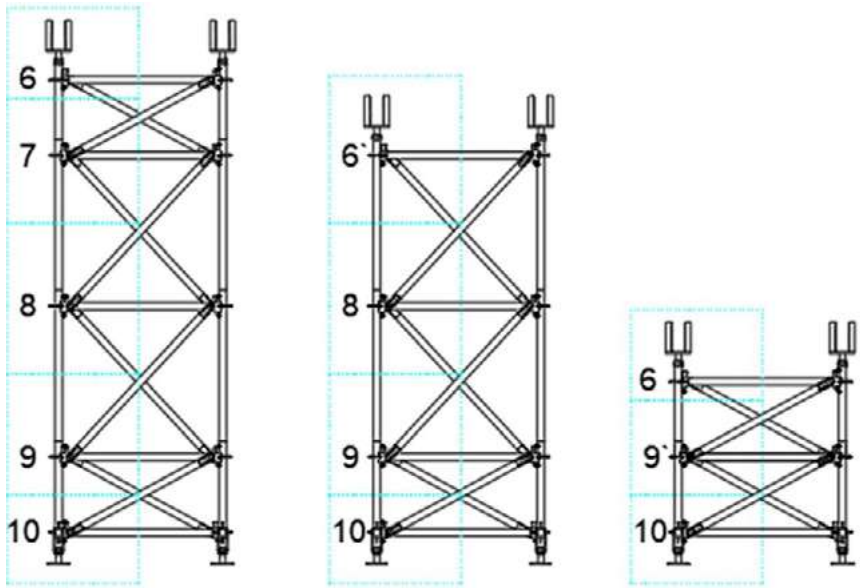

Fig. 2.1

Wind load diagram for individual modes:

a)) parallel direction *b)) perpendicular direction*

Tab. 2.2 Wind load value for wind pressure q=0.5 kN/m²

Tower type		AST109-109	AST109-157	AST109-207	AST109-257	AST109-307	Aerodynamic force factor *cf*	AST109-109	AST109-157	AST109-207	AST109-257	AST109-307
Direction	Node No (Fig. 2.1)	Interaction area of two planes of the tower [m²]						Force (characteristic value) [kN]				
parallel	1	0.234	0.243	0.253	0.264	0.275	1.02	0.119	0.124	0.129	0.135	0.141
	1`	0.309	0.318	0.329	0.340	0.351		0.158	0.163	0.168	0.174	0.179
	2	0.268	0.268	0.268	0.268	0.268		0.137	0.137	0.137	0.137	0.137
	3	0.344	0.344	0.344	0.344	0.344		0.176	0.176	0.176	0.176	0.176
	4	0.298	0.298	0.298	0.298	0.298		0.152	0.152	0.152	0.152	0.152
	4`	0.222	0.222	0.222	0.222	0.222		0.114	0.114	0.114	0.114	0.114
	5	0.208	0.217	0.228	0.239	0.250		0.106	0.111	0.116	0.122	0.128
perpendicular	6	0.247	0.290	0.336	0.383	0.431		0.126	0.148	0.172	0.196	0.220
	6`	0.303	0.344	0.389	0.435	0.482		0.155	0.176	0.199	0.222	0.246
	7	0.225	0.268	0.314	0.361	0.408		0.115	0.137	0.160	0.184	0.209
	8	0.281	0.322	0.367	0.413	0.459		0.143	0.164	0.187	0.211	0.235
	9	0.247	0.290	0.336	0.383	0.430		0.126	0.148	0.172	0.196	0.220
	9`	0.191	0.236	0.283	0.331	0.379		0.098	0.121	0.145	0.169	0.194
	10	0.214	0.257	0.303	0.350	0.397		0.109	0.131	0.155	0.179	0.203

Tab. 2.3 Wind load value for wind pressure q=0.8 kN/m²

Tower type		AST109-109	AST109-157	AST109-207	AST109-257	AST109-307	Aerodynamic force facto *cf*	AST109-109	AST109-157	AST109-207	AST109-257	AST109-307
Direction	Nr węzła (Fig. 2.1)	Interaction area of two planes of the tower [m²]						Force (characteristic value) [kN]				
parallel	1	0.234	0.243	0.253	0.264	0.275	1.02	0.191	0.199	0.207	0.216	0.225
	1`	0.309	0.318	0.329	0.340	0.351		0.253	0.260	0.269	0.278	0.287
	2	0.268	0.268	0.268	0.268	0.268		0.219	0.219	0.219	0.219	0.219
	3	0.344	0.344	0.344	0.344	0.344		0.281	0.281	0.281	0.281	0.281
	4	0.298	0.298	0.298	0.298	0.298		0.244	0.244	0.244	0.244	0.244
	4`	0.222	0.222	0.222	0.222	0.222		0.182	0.182	0.182	0.182	0.182
	5	0.208	0.217	0.228	0.239	0.250		0.170	0.178	0.186	0.195	0.204
perpendicular	6	0.247	0.290	0.336	0.383	0.431		0.202	0.237	0.275	0.313	0.352
	6`	0.303	0.344	0.389	0.435	0.482		0.248	0.282	0.318	0.356	0.394
	7	0.225	0.268	0.314	0.361	0.408		0.184	0.219	0.257	0.295	0.334
	8	0.281	0.322	0.367	0.413	0.459		0.230	0.263	0.300	0.337	0.376
	9	0.247	0.290	0.336	0.383	0.430		0.202	0.237	0.275	0.313	0.352
	9`	0.191	0.236	0.283	0.331	0.379		0.156	0.193	0.232	0.271	0.310
	10	0.214	0.257	0.303	0.350	0.397		0.175	0.210	0.248	0.286	0.325

Tab. 2.4 Wind load value for wind pressure q=1.1 kN/m²

Tower type		AST109-109	AST109-157	AST109-207	AST109-257	AST109-307	Aerodynamic force factor *cf*	AST109-109	AST109-157	AST109-207	AST109-257	AST109-307
Direction	Node No. (Fig. 2.1)	Interaction area of two planes of the tower [m²]						Force (characteristic value) [kN]				
parallel	1	0.234	0.243	0.253	0.264	0.275	1.02	0.263	0.273	0.285	0.297	0.310
	1`	0.309	0.318	0.329	0.340	0.351		0.348	0.358	0.370	0.382	0.395
	2	0.268	0.268	0.268	0.268	0.268		0.301	0.301	0.301	0.301	0.301
	3	0.344	0.344	0.344	0.344	0.344		0.386	0.386	0.386	0.386	0.386
	4	0.298	0.298	0.298	0.298	0.298		0.335	0.335	0.335	0.335	0.335
	4`	0.222	0.222	0.222	0.222	0.222		0.250	0.250	0.250	0.250	0.250
	5	0.208	0.217	0.228	0.239	0.250		0.234	0.244	0.256	0.268	0.281
perpendicular	6	0.247	0.290	0.336	0.383	0.431		0.278	0.326	0.378	0.431	0.484
	6`	0.303	0.344	0.389	0.435	0.482		0.341	0.387	0.437	0.489	0.542
	7	0.225	0.268	0.314	0.361	0.408		0.253	0.301	0.353	0.406	0.459
	8	0.281	0.322	0.367	0.413	0.459		0.316	0.362	0.412	0.464	0.517
	9	0.247	0.290	0.336	0.383	0.430		0.278	0.326	0.378	0.431	0.484
	9`	0.191	0.236	0.283	0.331	0.379		0.215	0.266	0.319	0.372	0.426
	10	0.214	0.257	0.303	0.350	0.397		0.241	0.289	0.341	0.394	0.447

Tab. 2.5 Wind load value for wind pressure q=0.1 kN/m²

Typ wieży		AST109-109	AST109-157	AST109-207	AST109-257	AST109-307	Aerodynamic force factor *cf*	AST109-109	AST109-157	AST109-207	AST109-257	AST109-307
Direction	Node No. (Fig. 2.1)	Interaction area of two planes of the tower [m²]						Force (characteristic value) [kN]				
parallel	1	0.234	0.243	0.253	0.264	0.275	1.02	0.024	0.025	0.026	0.027	0.028
	1`	0.309	0.318	0.329	0.340	0.351		0.032	0.033	0.034	0.035	0.036
	2	0.268	0.268	0.268	0.268	0.268		0.027	0.027	0.027	0.027	0.027
	3	0.344	0.344	0.344	0.344	0.344		0.035	0.035	0.035	0.035	0.035
	4	0.298	0.298	0.298	0.298	0.298		0.030	0.030	0.030	0.030	0.030
	4`	0.222	0.222	0.222	0.222	0.222		0.023	0.023	0.023	0.023	0.023
	5	0.208	0.217	0.228	0.239	0.250		0.021	0.022	0.023	0.024	0.026
perpendicular	6	0.247	0.290	0.336	0.383	0.431		0.025	0.030	0.034	0.039	0.044
	6`	0.303	0.344	0.389	0.435	0.482		0.031	0.035	0.040	0.044	0.049
	7	0.225	0.268	0.314	0.361	0.408		0.023	0.027	0.032	0.037	0.042
	8	0.281	0.322	0.367	0.413	0.459		0.029	0.033	0.037	0.042	0.047
	9	0.247	0.290	0.336	0.383	0.430		0.025	0.030	0.034	0.039	0.044
	9`	0.191	0.236	0.283	0.331	0.379		0.020	0.024	0.029	0.034	0.039
	10	0.214	0.257	0.303	0.350	0.397		0.022	0.026	0.031	0.036	0.041

Tab. 2.6 Wind load value for wind pressure q=0.2 kN/m²

Tower type		AST109-109	AST109-157	AST109-207	AST109-257	AST109-307	Aerodynamic force factor *cf*	AST109-109	AST109-157	AST109-207	AST109-257	AST109-307
Direction	Node No. (Fig. 2.1)	Interaction area of two planes of the tower [m²]						Force (characteristic value) [kN]				
parallel	1	0.234	0.243	0.253	0.264	0.275	1.02	0.048	0.050	0.052	0.054	0.056
	1`	0.309	0.318	0.329	0.340	0.351		0.063	0.065	0.067	0.069	0.072
	2	0.268	0.268	0.268	0.268	0.268		0.055	0.055	0.055	0.055	0.055
	3	0.344	0.344	0.344	0.344	0.344		0.070	0.070	0.070	0.070	0.070
	4	0.298	0.298	0.298	0.298	0.298		0.061	0.061	0.061	0.061	0.061
	4`	0.222	0.222	0.222	0.222	0.222		0.045	0.045	0.045	0.045	0.045
	5	0.208	0.217	0.228	0.239	0.250		0.043	0.044	0.047	0.049	0.051
perpendicular	6	0.247	0.290	0.336	0.383	0.431		0.051	0.059	0.069	0.078	0.088
	6`	0.303	0.344	0.389	0.435	0.482		0.062	0.070	0.080	0.089	0.099
	7	0.225	0.268	0.314	0.361	0.408		0.046	0.055	0.064	0.074	0.083
	8	0.281	0.322	0.367	0.413	0.459		0.057	0.066	0.075	0.084	0.094
	9	0.247	0.290	0.336	0.383	0.430		0.051	0.059	0.069	0.078	0.088
	9`	0.191	0.236	0.283	0.331	0.379		0.039	0.048	0.058	0.068	0.077
	10	0.214	0.257	0.303	0.350	0.397		0.044	0.053	0.062	0.072	0.081

2.2 AST109 tower configuration table

The AST109 support tower system included five variants of the size of the structure cross-section.

- AST109-109 m – section 1.09 x 1.09 m
- AST109-157 m – section 1.09 x 1.57 m
- AST109-207 m – section 1.09 x 2.07 m
- AST109-257 m – section 1.09 x 2.57 m
- AST109-307 m – section 1.09 x 3.07 m

Please note that the data/configuration tables for individual installation heights auxiliary components necessary during the tower installation (e.g. installation platforms) are not provided.

The MP-112 cotter included in the lists must be installed to the towers for the transport of the assembly with a crane.

It is not allowed to transport the installed tower assembly with the stabilizing ballast.

How to read the tower identifications

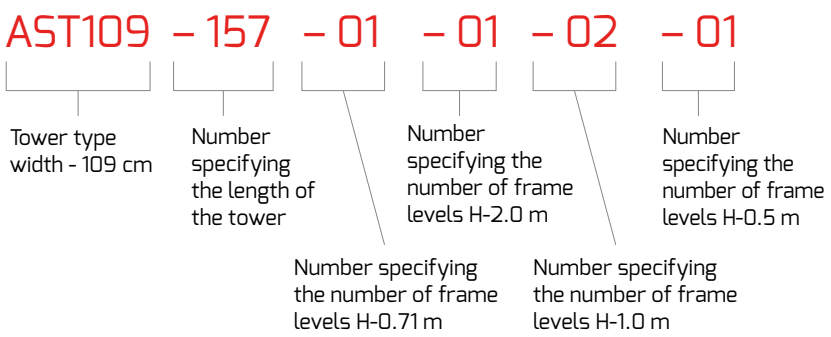

The **frame level** is understood as two frames of the same type installed opposite each other at a distance equal to the length of the tower.

Altrad Shoring Tower - AST109	1.09 mx1.09 m	Number of frame levels 0.71 m	Number of frame levels 2.0 m	Number of frame levels 1.0 m	Number of frame levels 0.5 m	Total height without head and base	Minimum tower height H_{min}	Average tower height	Maximum tower height H_{max}	Components of AST Tower 1,09-1,09 m												
										Steel frame 2.0x1.09 m	Steel frame 1.0x1.09 m	Steel frame 0.7x1.09 m	Steel frame 0.50x1.09 m	Adjustable base 0.6 m	Cross threaded head 0.45 m	Horizontal brace 1.09x1.09 m	Base connector	Cotter	Horizontal transom 1.09 m	Vertical brace 1.0x1.09 m	Vertical brace 0.5x1.09 m	
										A5221109	A5211109	A5212109	A5210109	A5201060	A5202045	A5208100	A5201001	MP112	E371810	E373210	E373211	
										Component weight [kg]												Weight [kg]
							s-10/10	s-30/20	s-39/26	40.27	21.25	17.46	13.51	6.49	10.98	6.16	0.87	0.07	4.56	5.79	4.87	
AST109 -	109	- 01	- 00	- 00	- 00	0.71	1.06	1.21	1.46	0	0	2	0	4	4	2	4	0	4	0	2	148.6
AST109 -	109	- 01	- 00	- 00	- 01	1.21	1.41	1.71	1.96	0	0	2	2	4	4	2	4	4	6	0	4	194.7
AST109 -	109	- 01	- 00	- 01	- 00	1.71	1.91	2.21	2.46	0	2	2	0	4	4	2	4	4	6	2	2	212.1
AST109 -	109	- 01	- 00	- 01	- 01	2.21	2.41	2.71	2.96	0	2	2	2	4	4	2	4	8	8	2	4	258.2
AST109 -	109	- 01	- 00	- 02	- 00	2.71	2.91	3.21	3.46	0	4	2	0	4	4	2	4	8	8	4	2	275.5
AST109 -	109	- 01	- 01	- 00	- 00	2.71	2.91	3.21	3.46	2	0	2	0	4	4	2	4	4	8	4	2	270.8
AST109 -	109	- 01	- 00	- 02	- 01	3.21	3.41	3.71	3.96	0	2	2	2	4	4	2	4	12	10	4	4	279.2
AST109 -	109	- 01	- 01	- 00	- 01	3.21	3.41	3.71	3.96	2	0	2	2	4	4	2	4	8	10	4	4	317.0
AST109 -	109	- 01	- 00	- 03	- 00	3.71	3.91	4.21	4.46	0	6	2	0	4	4	2	4	12	10	6	2	339.0
AST109 -	109	01	- 01	- 01	- 00	3.71	3.91	4.21	4.46	2	2	2	0	4	4	2	4	8	10	6	2	334.3
AST109 -	109	- 01	- 00	- 03	- 01	4.21	4.41	4.71	4.96	0	6	2	2	4	4	2	4	16	12	6	4	385.2
AST109 -	109	- 01	- 01	- 01	- 01	4.21	4.41	4.71	4.96	2	2	2	2	4	4	2	4	12	12	6	4	380.4
AST109 -	109	- 01	- 00	- 04	- 00	4.71	4.91	5.21	5.46	0	8	2	0	4	4	2	4	16	12	8	2	402.5
AST109 -	109	- 01	- 02	- 00	- 00	4.71	4.91	5.21	5.46	4	0	2	0	4	4	2	4	8	12	8	2	393.0
AST109 -	109	- 01	- 00	- 04	- 01	5.21	5.41	5.71	5.96	0	8	2	2	4	4	2	4	20	14	8	4	448.7
AST109 -	109	- 01	- 02	- 00	- 01	5.21	5.41	5.71	5.96	4	0	2	2	4	4	2	4	12	14	8	4	439.2
AST109 -	109	- 01	- 00	- 05	- 00	5.71	5.91	6.21	6.46	0	10	2	0	4	4	2	4	20	14	10	2	466.0
AST109 -	109	- 01	- 02	- 01	- 00	5.71	5.91	6.21	6.46	4	2	2	0	4	4	2	4	12	14	10	2	456.5
AST109 -	109	- 01	- 00	- 05	- 01	6.21	6.41	6.71	6.96	0	10	2	2	4	4	2	4	24	16	10	4	512.1
AST109 -	109	- 01	- 02	- 01	- 01	6.21	6.41	6.71	6.96	4	2	2	2	4	4	2	4	16	16	10	4	502.7
AST109 -	109	- 01	- 00	- 06	- 00	6.71	6.91	7.21	7.46	0	12	2	0	4	4	2	4	24	16	12	2	529.5
AST109 -	109	- 01	- 03	- 00	- 00	6.71	6.91	7.21	7.46	6	0	2	0	4	4	2	4	12	16	12	2	515.2
AST109 -	109	- 01	- 00	- 06	- 01	7.21	7.41	7.71	7.96	0	12	2	2	4	4	2	4	28	18	12	4	575.6
AST109 -	109	- 01	- 03	- 00	- 01	7.21	7.41	7.71	7.96	6	0	2	2	4	4	2	4	16	18	12	4	561.4
AST109 -	109	- 01	- 00	- 07	- 00	7.71	7.91	8.21	8.46	0	14	2	0	4	4	2	4	28	18	14	2	592.9
AST109 -	109	- 01	- 03	- 01	- 00	7.71	7.91	8.21	8.46	6	2	2	0	4	4	2	4	16	18	14	2	578.7
AST109 -	109	- 01	- 00	- 07	- 01	8.21	8.41	8.71	8.96	0	14	2	2	4	4	2	4	32	20	14	4	639.1
AST109 -	109	- 01	- 03	- 01	- 01	8.21	8.41	8.71	8.96	6	2	2	2	4	4	2	4	20	20	14	4	624.9
AST109 -	109	- 01	- 00	- 08	- 00	8.71	8.91	9.21	9.46	0	16	2	0	4	4	2	4	32	20	16	2	656.4
AST109 -	109	- 01	- 04	- 00	- 00	8.71	8.91	9.21	9.46	8	0	2	0	4	4	2	4	16	20	16	2	637.5
AST109 -	109	- 01	- 00	- 08	- 01	9.21	9.41	9.71	9.96	0	16	2	2	4	4	2	4	36	22	16	4	702.6
AST109 -	109	- 01	- 04	- 00	- 01	9.21	9.41	9.71	9.96	8	0	2	2	4	4	2	4	20	22	16	4	683.6
AST109 -	109	- 01	- 00	- 09	- 00	9.71	9.91	10.21	10.46	0	18	2	0	4	4	2	4	36	22	18	2	719.9
AST109 -	109	- 01	- 04	- 01	- 00	9.71	9.91	10.21	10.46	8	2	2	0	4	4	2	4	20	22	18	2	700.9
AST109 -	109	- 01	- 00	- 09	- 01	10.21	10.41	10.71	10.96	0	18	2	2	4	4	2	4	40	24	18	4	766.1
AST109 -	109	- 01	- 04	- 01	- 01	10.21	10.41	10.71	10.96	8	2	2	2	4	4	2	4	24	24	18	4	747.1
AST109 -	109	- 01	- 00	- 10	- 00	10.71	10.91	11.21	11.46	0	20	2	0	4	4	2	4	40	24	20	2	783.4
AST109 -	109	- 01	- 05	- 00	- 00	10.71	10.91	11.21	11.46	10	0	2	0	4	4	2	4	20	24	20	2	759.7
AST109 -	109	- 01	- 00	- 10	- 01	11.21	11.41	11.71	11.96	0	20	2	2	4	4	2	4	44	26	20	4	829.5
AST109 -	109	- 01	- 05	- 00	- 01	11.21	11.41	11.71	11.96	10	0	2	2	4	4	2	4	24	26	20	4	805.8
AST109 -	109	- 01	- 00	- 11	- 00	11.71	11.91	12.21	12.46	0	22	2	0	4	4	2	4	44	26	22	2	846.9
AST109 -	109	- 01	- 05	- 01	- 00	11.71	11.91	12.21	12.46	10	2	2	0	4	4	2	4	24	26	22	2	823.2
AST109 -	109	- 01	- 00	- 11	- 01	12.21	12.41	12.71	12.96	0	22	2	2	4	4	2	4	48	28	22	4	893.0
AST109 -	109	- 01	- 05	- 01	- 01	12.21	12.41	12.71	12.96	10	2	2	2	4	4	2	4	28	28	22	4	869.3
AST109 -	109	- 01	- 00	- 12	- 00	12.71	12.91	13.21	13.46	0	24	2	0	4	4	2	4	48	28	24	2	910.3
AST109 -	109	- 01	- 06	- 00	- 00	12.71	12.91	13.21	13.46	12	0	2	0	4	4	2	4	24	28	24	2	881.9
AST109 -	109	- 01	- 00	- 12	- 01	13.21	13.41	13.71	13.96	0	24	2	2	4	4	2	4	52	30	24	4	956.5
AST109 -	109	- 01	- 06	- 00	- 01	13.21	13.41	13.71	13.96	12	0	2	2	4	4	2	4	28	30	24	4	928.1
AST109 -	109	- 01	- 00	- 13	- 00	13.71	13.91	14.21	14.46	0	26	2	0	4	4	2	4	52	30	26	2	973.8
AST109 -	109	- 01	- 06	- 01	- 00	13.71	13.91	14.21	14.46	12	2	2	0	4	4	2	4	28	30	26	2	945.4
AST109 -	109	- 01	- 00	- 13	- 01	14.21	14.41	14.71	14.96	0	26	2	2	4	4	2	4	56	32	26	4	1020.0
AST109 -	109	- 01	- 06	- 01	- 01	14.21	14.41	14.71	14.96	12	2	2	2	4	4	2	4	32	32	26	4	991.5
AST109 -	109	- 01	- 00	- 14	- 00	14.71	14.91	15.21	15.46	0	28	2	0	4	4	2	4	56	32	28	2	1037.3
AST109 -	109	- 01	- 07	- 00	- 00	14.71	14.91	15.21	15.46	14	0	2	0	4	4	2	4	28	32	28	2	1004.1
AST109 -	109	- 01	- 00	- 14	- 01	15.21	15.41	15.71	15.96	0	28	2	2	4	4	2	4	60	34	28	4	1083.5
AST109 -	109	- 01	- 07	- 00	- 01	15.21	15.41	15.71	15.96	14	0	2	2	4	4	2	4	32	34	28	4	1050.3
AST109 -	109	- 01	- 00	- 15	- 00	15.71	15.91	16.21	16.46	0	30	2	0	4	4	2	4	60	34	30	2	1100.8
AST109 -	109	- 01	- 07	- 01	- 00	15.71	15.91	16.21	16.46	14	2	2	0	4	4	2	4	32	34	30	2	1067.6
AST109 -	109	- 01	- 00	- 15	- 01	16.21	16.41	16.71	16.96	0	2	2	2	4	4	2	4	36	36	30	4	1146.9
AST109 -	109	- 01	- 07	- 01	- 01	16.21	16.41	16.71	16.96	14	2	2	2	4	4	2	4	32	36	30	4	1113.8
AST109 -	109	- 01	- 00	- 16	- 00	16.71	16.91	17.21	17.46	0	32	2	0	4	4	2	4	64	36	32	2	1164.3
AST109 -	109	- 01	- 08	- 00	- 00	16.71	16.91	17.21	17.46	16	0	2	0	4	4	2	4	32	36	32	2	1126.3
AST109 -	109	- 01	- 00	- 16	- 01	17.21	17.41	17.71	17.96	0	32	2	2	4	4	2	4	68	38	32	4	1210.4
AST109 -	109	- 01	- 08	- 00	- 01	17.21	17.41	17.71	17.96	16	0	2	2	4	4	2	4	36	38	32	4	1172.5
AST109 -	109	- 01	- 00	- 17	- 00	17.71	17.91	18.21	18.46	0	34	2	0	4	4	2	4	68	38	34	2	1227.7
AST109 -	109	- 01	- 08	- 01	- 00	17.71	17.91	18.21	18.46	16	2	2	0	4	4	2	4	36	38	34	2	1189.8
AST109 -	109	- 01	- 00	- 17	- 01	18.21	18.41	18.71	18.96	0	34	2	2	4	4	2	4	72	40	34	4	1273.9
AST109 -	109	- 01	- 08	- 01	- 01	18.21	18.41	18.71	18.96	16	2	2	2	4	4	2	4	40	40	34	4	1236.0
AST109 -	109	- 01	- 00	- 18	- 00	18.71	18.91	19.21	19.46	0	36	2	0	4	4	2	4	72	40	36	2	1291.2

Altrad Shoring Tower - AST109	1.09 mx1.57 m	Number of frame levels 0.71 m	Number of frame levels 2.0 m	Number of frame levels 1.0 m	Number of frame levels 0.5 m	Total height without head and base	Minimum tower height H_{min}	Average tower height	Maximum tower height H_{max}	Components of AST Tower 1,09-1,57 m												
										Steel frame 2.0x1.09 m	Steel frame 1.0x1.09 m	Steel frame 0.7x1.09 m	Steel frame 0.50x1.09 m	Adjustable base 0.6 m	Cross threaded head 0.45 m	Horizontal brace 1.09x1.57 m	Base connector	Cotter	Horizontal transom 1.57 m	Vertical brace 1.0x1.57 m	Vertical brace 0.5x1.57 m	
										A5221109	A5211109	A5212109	A5210109	A5201060	A5202045	A5208150	A5201001	MP112	E371815	E373215	E373216	
										Component weight [kg]												Weight [kg]
							s-10/10	s-30/20	s-39/26	40.27	21.25	17.46	13.51	6.49	10.98	7.52	0.87	0.07	5.56	6.86	6.18	
AST109	- 157	01	- 00	- 00	- 00	0.71	1.06	1.21	1.46	0	0	2	0	4	4	2	4	0	4	0	2	157.9
AST109	- 157	01	- 00	- 00	- 01	1.21	1.41	1.71	1.96	0	0	2	2	4	4	2	4	4	6	0	4	208.7
AST109	- 157	01	- 00	- 01	- 00	1.71	1.91	2.21	2.46	0	2	2	0	4	4	2	4	4	6	2	2	225.5
AST109	- 157	01	- 00	- 01	- 01	2.21	2.41	2.71	2.96	0	2	2	2	4	4	2	4	8	8	2	4	276.3
AST109	- 157	01	- 00	- 02	- 00	2.71	2.91	3.21	3.46	0	4	2	0	4	4	2	4	8	8	4	2	293.2
AST109	- 157	01	- 01	- 00	- 00	2.71	2.91	3.21	3.46	2	0	2	0	4	4	2	4	4	8	4	2	288.4
AST109	- 157	01	- 00	- 02	- 01	3.21	3.41	3.71	3.96	0	2	2	2	4	4	2	4	12	10	4	4	301.4
AST109	- 157	01	- 01	- 00	- 01	3.21	3.41	3.71	3.96	2	0	2	2	4	4	2	4	8	10	4	4	339.2
AST109	- 157	01	- 00	- 03	- 00	3.71	3.91	4.21	4.46	0	6	2	0	4	4	2	4	12	10	6	2	360.8
AST109	- 157	01	- 01	- 01	- 00	3.71	3.91	4.21	4.46	2	2	2	0	4	4	2	4	8	10	6	2	356.0
AST109	- 157	01	- 00	- 03	- 01	4.21	4.41	4.71	4.96	0	6	2	2	4	4	2	4	16	12	6	4	411.6
AST109	- 157	01	- 01	- 01	- 01	4.21	4.41	4.71	4.96	2	2	2	2	4	4	2	4	12	12	6	4	406.8
AST109	- 157	01	- 00	- 04	- 00	4.71	4.91	5.21	5.46	0	8	2	0	4	4	2	4	16	12	8	2	428.4
AST109	- 157	01	- 02	- 00	- 00	4.71	4.91	5.21	5.46	4	0	2	0	4	4	2	4	8	12	8	2	418.9
AST109	- 157	01	- 00	- 04	- 01	5.21	5.41	5.71	5.96	0	8	2	2	4	4	2	4	20	14	8	4	479.2
AST109	- 157	01	- 02	- 00	- 01	5.21	5.41	5.71	5.96	4	0	2	2	4	4	2	4	12	14	8	4	469.7
AST109	- 157	01	- 00	- 05	- 00	5.71	5.91	6.21	6.46	0	10	2	0	4	4	2	4	20	14	10	2	496.0
AST109	- 157	01	- 02	- 01	- 00	5.71	5.91	6.21	6.46	4	2	2	0	4	4	2	4	12	14	10	2	486.5
AST109	- 157	01	- 00	- 05	- 01	6.21	6.41	6.71	6.96	0	10	2	2	4	4	2	4	24	16	10	4	546.8
AST109	- 157	01	- 02	- 01	- 01	6.21	6.41	6.71	6.96	4	2	2	2	4	4	2	4	16	16	10	4	537.3
AST109	- 157	01	- 00	- 06	- 00	6.71	6.91	7.21	7.46	0	12	2	0	4	4	2	4	24	16	12	2	563.6
AST109	- 157	01	- 03	- 00	- 00	6.71	6.91	7.21	7.46	6	0	2	0	4	4	2	4	12	16	12	2	549.4
AST109	- 157	01	- 00	- 06	- 01	7.21	7.41	7.71	7.96	0	12	2	2	4	4	2	4	28	18	12	4	614.4
AST109	- 157	01	- 03	- 00	- 01	7.21	7.41	7.71	7.96	6	0	2	2	4	4	2	4	16	18	12	4	600.2
AST109	- 157	01	- 00	- 07	- 00	7.71	7.91	8.21	8.46	0	14	2	0	4	4	2	4	28	18	14	2	631.3
AST109	- 157	01	- 03	- 01	- 00	7.71	7.91	8.21	8.46	6	2	2	0	4	4	2	4	16	18	14	2	617.0
AST109	- 157	01	- 00	- 07	- 01	8.21	8.41	8.71	8.96	0	14	2	2	4	4	2	4	32	20	14	4	682.0
AST109	- 157	01	- 03	- 01	- 01	8.21	8.41	8.71	8.96	6	2	2	2	4	4	2	4	20	20	14	4	667.8
AST109	- 157	01	- 00	- 08	- 00	8.71	8.91	9.21	9.46	0	16	2	0	4	4	2	4	32	20	16	2	698.9
AST109	- 157	01	- 04	- 00	- 00	8.71	8.91	9.21	9.46	8	0	2	0	4	4	2	4	16	20	16	2	679.9
AST109	- 157	01	- 00	- 08	- 01	9.21	9.41	9.71	9.96	0	16	2	2	4	4	2	4	36	22	16	4	749.7
AST109	- 157	01	- 04	- 00	- 01	9.21	9.41	9.71	9.96	8	0	2	2	4	4	2	4	20	22	16	4	730.7
AST109	- 157	01	- 00	- 09	- 00	9.71	9.91	10.21	10.46	0	18	2	0	4	4	2	4	36	22	18	2	766.5
AST109	- 157	01	- 04	- 01	- 00	9.71	9.91	10.21	10.46	8	2	2	0	4	4	2	4	20	22	18	2	747.5
AST109	- 157	01	- 00	- 09	- 01	10.21	10.41	10.71	10.96	0	18	2	2	4	4	2	4	40	24	18	4	817.3
AST109	- 157	01	- 04	- 01	- 01	10.21	10.41	10.71	10.96	8	2	2	2	4	4	2	4	24	24	18	4	798.3
AST109	- 157	01	- 00	- 10	- 00	10.71	10.91	11.21	11.46	0	20	2	0	4	4	2	4	40	24	20	2	834.1
AST109	- 157	01	- 05	- 00	- 00	10.71	10.91	11.21	11.46	10	0	2	0	4	4	2	4	20	24	20	2	810.4
AST109	- 157	01	- 00	- 10	- 01	11.21	11.41	11.71	11.96	0	20	2	2	4	4	2	4	44	26	20	4	884.9
AST109	- 157	01	- 05	- 00	- 01	11.21	11.41	11.71	11.96	10	0	2	2	4	4	2	4	24	26	20	4	861.2
AST109	- 157	01	- 00	- 11	- 00	11.71	11.91	12.21	12.46	0	22	2	0	4	4	2	4	44	26	22	2	901.7
AST109	- 157	01	- 05	- 01	- 00	11.71	11.91	12.21	12.46	10	2	2	0	4	4	2	4	24	26	22	2	878.0
AST109	- 157	01	- 00	- 11	- 01	12.21	12.41	12.71	12.96	0	22	2	2	4	4	2	4	48	28	22	4	952.5
AST109	- 157	01	- 05	- 01	- 01	12.21	12.41	12.71	12.96	10	2	2	2	4	4	2	4	28	28	22	4	928.8
AST109	- 157	01	- 00	- 12	- 00	12.71	12.91	13.21	13.46	0	24	2	0	4	4	2	4	48	28	24	2	969.4
AST109	- 157	01	- 06	- 00	- 00	12.71	12.91	13.21	13.46	12	0	2	0	4	4	2	4	24	28	24	2	940.9
AST109	- 157	01	- 00	- 12	- 01	13.21	13.41	13.71	13.96	0	24	2	2	4	4	2	4	52	30	24	4	1020.1
AST109	- 157	01	- 06	- 00	- 01	13.21	13.41	13.71	13.96	12	0	2	2	4	4	2	4	28	30	24	4	991.7
AST109	- 157	01	- 00	- 13	- 00	13.71	13.91	14.21	14.46	0	26	2	0	4	4	2	4	52	30	26	2	1037.0
AST109	- 157	01	- 06	- 01	- 00	13.71	13.91	14.21	14.46	12	2	2	0	4	4	2	4	28	30	26	2	1008.5
AST109	- 157	01	- 00	- 13	- 01	14.21	14.41	14.71	14.96	0	26	2	2	4	4	2	4	56	32	26	4	1087.8
AST109	- 157	01	- 06	- 01	- 01	14.21	14.41	14.71	14.96	12	2	2	2	4	4	2	4	32	32	26	4	1059.3
AST109	- 157	01	- 00	- 14	- 00	14.71	14.91	15.21	15.46	0	28	2	0	4	4	2	4	56	32	28	2	1104.6
AST109	- 157	01	- 07	- 00	- 00	14.71	14.91	15.21	15.46	14	0	2	0	4	4	2	4	28	32	28	2	1071.4
AST109	- 157	01	- 00	- 14	- 01	15.21	15.41	15.71	15.96	0	28	2	2	4	4	2	4	60	34	28	4	1155.4
AST109	- 157	01	- 07	- 00	- 01	15.21	15.41	15.71	15.96	14	0	2	2	4	4	2	4	32	34	28	4	1122.2
AST109	- 157	01	- 00	- 15	- 00	15.71	15.91	16.21	16.46	0	30	2	0	4	4	2	4	60	34	30	2	1172.2
AST109	- 157	01	- 07	- 01	- 00	15.71	15.91	16.21	16.46	14	2	2	0	4	4	2	4	32	34	30	2	1139.0
AST109	- 157	01	- 00	- 15	- 01	16.21	16.41	16.71	16.96	0	30	2	2	4	4	2	4	64	36	30	4	1223.0
AST109	- 157	01	- 07	- 01	- 01	16.21	16.41	16.71	16.96	14	2	2	2	4	4	2	4	36	36	30	4	1189.8
AST109	- 157	01	- 00	- 16	- 00	16.71	16.91	17.21	17.46	0	32	2	0	4	4	2	4	64	36	32	2	1239.8
AST109	- 157	01	- 08	- 00	- 00	16.71	16.91	17.21	17.46	16	0	2	0	4	4	2	4	32	36	32	2	1201.9
AST109	- 157	01	- 00	- 16	- 01	17.21	17.41	17.71	17.96	0	32	2	2	4	4	2	4	68	38	32	4	1290.6
AST109	- 157	01	- 08	- 00	- 01	17.21	17.41	17.71	17.96	16	0	2	2	4	4	2	4	36	38	32	4	1252.7
AST109	- 157	01	- 00	- 17	- 00	17.71	17.91	18.21	18.46	0	34	2	0	4	4	2	4	68	38	34	2	1307.5
AST109	- 157	01	- 08	- 01	- 00	17.71	17.91	18.21	18.46	16	2	2	0	4	4	2	4	36	38	34	2	1269.5
AST109	- 157	01	- 00	- 17	- 01	18.21	18.41	18.71	18.96	0	34	2	2	4	4	2	4	72	40	34	4	1358.2
AST109	- 157	01	- 08	- 01	- 01	18.21	18.41	18.71	18.96	16	2	2	2	4	4	2	4	40	40	34	4	1320.3
AST109	- 157	01	- 00	- 18	- 00	18.71	18.91	19.21	19.46	0	36	2	0	4	4	2	4	72	40	36	2	1375.1
AST109	- 157	01	- 09	- 00	- 00	18.71	18.91	19.21	19.46	18	0	2	0	4	4	2	4	36	40	36	2	1332.4

Altrad Shoring Tower - AST109	1.09 mx2.07 m	Number of frame levels 0.71 m	Number of frame levels 2.0 m	Number of frame levels 1.0 m	Number of frame levels 0.5 m	Total height without head and base	Minimum tower height H_{min}	Average tower Height	Maximum Tower Height H_{max}	Components of AST Tower 1.09-2.07 m													Weight [kg]
										Steel frame 2.0x1.09 m	Steel frame 1.0x1.09 m	Steel frame 0.7x1.09 m	Steel frame 0.50x1.09 m	Adjustable base 0,6 m	Cross threaded head 0.45 m	Horizontal brace 1.09x2.07 m	Base connector	Safety cotter	Horizontal transom 2.07 m	Vertical brace 1.0x2.07 m	Vertical brace 0.5x2.07 m	
										A5221109	A5211109	A5212109	A5210109	A5201060	A5202045	A5208200	A5201001	MP112	E371820	E373220	E373221	
										Component weight [kg]												
							s-10/10	s-30/20	s-39/26	40.27	21.25	17.46	13.51	6.49	10.98	9.08	0.87	0.07	7.08	8.12	7.59	
AST109	- 207	- 01	- 00	- 00	- 00	0.71	1.06	1.21	1.46	0	0	2	0	4	4	2	4	0	4	0	2	169.9
AST109	- 207	- 01	- 00	- 00	- 01	1.21	1.41	1.71	1.96	0	0	2	2	4	4	2	4	4	6	0	4	226.6
AST109	- 207	- 01	- 00	- 01	- 00	1.71	1.91	2.21	2.46	0	2	2	0	4	4	2	4	4	6	2	2	243.1
AST109	- 207	- 01	- 00	- 01	- 01	2.21	2.41	2.71	2.96	0	2	2	2	4	4	2	4	8	8	2	4	299.8
AST109	- 207	- 01	- 00	- 02	- 00	2.71	2.91	3.21	3.46	0	4	2	0	4	4	2	4	8	8	4	2	316.3
AST109	- 207	- 01	- 01	- 00	- 00	2.71	2.91	3.21	3.46	2	0	2	0	4	4	2	4	4	8	4	2	311.6
AST109	- 207	- 01	- 00	- 02	- 01	3.21	3.41	3.71	3.96	0	2	2	2	4	4	2	4	12	10	4	4	330.4
AST109	- 207	- 01	- 01	- 00	- 01	3.21	3.41	3.71	3.96	2	0	2	2	4	4	2	4	8	10	4	4	368.2
AST109	- 207	- 01	- 00	- 03	- 00	3.71	3.91	4.21	4.46	0	6	2	0	4	4	2	4	12	10	6	2	389.5
AST109	- 207	- 01	- 01	- 01	- 00	3.71	3.91	4.21	4.46	2	2	2	0	4	4	2	4	8	10	6	2	384.7
AST109	- 207	- 01	- 00	- 03	- 01	4.21	4.41	4.71	4.96	0	6	2	2	4	4	2	4	16	12	6	4	446.1
AST109	- 207	- 01	- 01	- 01	- 01	4.21	4.41	4.71	4.96	2	2	2	2	4	4	2	4	12	12	6	4	441.4
AST109	- 207	- 01	- 00	- 04	- 00	4.71	4.91	5.21	5.46	0	8	2	0	4	4	2	4	16	12	8	2	462.7
AST109	- 207	- 01	- 02	- 00	- 00	4.71	4.91	5.21	5.46	4	0	2	0	4	4	2	4	8	12	8	2	453.2
AST109	- 207	- 01	- 00	- 04	- 01	5.21	5.41	5.71	5.96	0	8	2	2	4	4	2	4	20	14	8	4	519.3
AST109	- 207	- 01	- 02	- 00	- 01	5.21	5.41	5.71	5.96	4	0	2	2	4	4	2	4	12	14	8	4	509.8
AST109	- 207	- 01	- 00	- 05	- 00	5.71	5.91	6.21	6.46	0	10	2	0	4	4	2	4	20	14	10	2	535.8
AST109	- 207	- 01	- 02	- 01	- 00	5.71	5.91	6.21	6.46	4	2	2	0	4	4	2	4	12	14	10	2	526.4
AST109	- 207	- 01	- 00	- 05	- 01	6.21	6.41	6.71	6.96	0	10	2	2	4	4	2	4	24	16	10	4	592.5
AST109	- 207	- 01	- 02	- 01	- 01	6.21	6.41	6.71	6.96	4	2	2	2	4	4	2	4	16	16	10	4	583.0
AST109	- 207	- 01	- 00	- 06	- 00	6.71	6.91	7.21	7.46	0	12	2	0	4	4	2	4	24	16	12	2	609.0
AST109	- 207	- 01	- 03	- 00	- 00	6.71	6.91	7.21	7.46	6	0	2	0	4	4	2	4	12	16	12	2	594.8
AST109	- 207	- 01	- 00	- 06	- 01	7.21	7.41	7.71	7.96	0	12	2	2	4	4	2	4	28	18	12	4	665.7
AST109	- 207	- 01	- 03	- 00	- 01	7.21	7.41	7.71	7.96	6	0	2	2	4	4	2	4	16	18	12	4	651.4
AST109	- 207	- 01	- 00	- 07	- 00	7.71	7.91	8.21	8.46	0	14	2	0	4	4	2	4	28	18	14	2	682.2
AST109	- 207	- 01	- 03	- 01	- 00	7.71	7.91	8.21	8.46	6	2	2	0	4	4	2	4	16	18	14	2	668.0
AST109	- 207	- 01	- 00	- 07	- 01	8.21	8.41	8.71	8.96	0	14	2	2	4	4	2	4	32	20	14	4	738.8
AST109	- 207	- 01	- 03	- 01	- 01	8.21	8.41	8.71	8.96	6	2	2	2	4	4	2	4	20	20	14	4	724.6
AST109	- 207	- 01	- 00	- 08	- 00	8.71	8.91	9.21	9.46	0	16	2	0	4	4	2	4	32	20	16	2	755.4
AST109	- 207	- 01	- 04	- 00	- 00	8.71	8.91	9.21	9.46	8	0	2	0	4	4	2	4	16	20	16	2	736.4
AST109	- 207	- 01	- 00	- 08	- 01	9.21	9.41	9.71	9.96	0	16	2	2	4	4	2	4	36	22	16	4	812.0
AST109	- 207	- 01	- 04	- 00	- 01	9.21	9.41	9.71	9.96	8	0	2	2	4	4	2	4	20	22	16	4	793.1
AST109	- 207	- 01	- 00	- 09	- 00	9.71	9.91	10.21	10.46	0	18	2	0	4	4	2	4	36	22	18	2	828.6
AST109	- 207	- 01	- 04	- 01	- 00	9.71	9.91	10.21	10.46	8	2	2	0	4	4	2	4	20	22	18	2	809.6
AST109	- 207	- 01	- 00	- 09	- 01	10.21	10.41	10.71	10.96	0	18	2	2	4	4	2	4	40	24	18	4	885.2
AST109	- 207	- 01	- 04	- 01	- 01	10.21	10.41	10.71	10.96	8	2	2	2	4	4	2	4	24	24	18	4	866.2
AST109	- 207	- 01	- 00	- 10	- 00	10.71	10.91	11.21	11.46	0	20	2	0	4	4	2	4	40	24	20	2	901.7
AST109	- 207	- 01	- 05	- 00	- 00	10.71	10.91	11.21	11.46	10	0	2	0	4	4	2	4	20	24	20	2	878.0
AST109	- 207	- 01	- 00	- 10	- 01	11.21	11.41	11.71	11.96	0	20	2	2	4	4	2	4	44	26	20	4	958.4
AST109	- 207	- 01	- 05	- 00	- 01	11.21	11.41	11.71	11.96	10	0	2	2	4	4	2	4	24	26	20	4	934.7
AST109	- 207	- 01	- 00	- 11	- 00	11.71	11.91	12.21	12.46	0	22	2	0	4	4	2	4	44	26	22	2	974.9
AST109	- 207	- 01	- 05	- 01	- 00	11.71	11.91	12.21	12.46	10	2	2	0	4	4	2	4	24	26	22	2	951.2
AST109	- 207	- 01	- 00	- 11	- 01	12.21	12.41	12.71	12.96	0	22	2	2	4	4	2	4	48	28	22	4	1031.6
AST109	- 207	- 01	- 05	- 01	- 01	12.21	12.41	12.71	12.96	10	2	2	2	4	4	2	4	28	28	22	4	1007.9
AST109	- 207	- 01	- 00	- 12	- 00	12.71	12.91	13.21	13.46	0	24	2	0	4	4	2	4	48	28	24	2	1048.1
AST109	- 207	- 01	- 06	- 00	- 00	12.71	12.91	13.21	13.46	12	0	2	0	4	4	2	4	24	28	24	2	1019.7
AST109	- 207	- 01	- 00	- 12	- 01	13.21	13.41	13.71	13.96	0	24	2	2	4	4	2	4	52	30	24	4	1104.7
AST109	- 207	- 01	- 06	- 00	- 01	13.21	13.41	13.71	13.96	12	0	2	2	4	4	2	4	28	30	24	4	1076.3
AST109	- 207	- 01	- 00	- 13	- 00	13.71	13.91	14.21	14.46	0	26	2	0	4	4	2	4	52	30	26	2	1121.3
AST109	- 207	- 01	- 06	- 01	- 00	13.71	13.91	14.21	14.46	12	2	2	0	4	4	2	4	28	30	26	2	1092.8
AST109	- 207	- 01	- 00	- 13	- 01	14.21	14.41	14.71	14.96	0	26	2	2	4	4	2	4	56	32	26	4	1177.9
AST109	- 207	- 01	- 06	- 01	- 01	14.21	14.41	14.71	14.96	12	2	2	2	4	4	2	4	32	32	26	4	1149.5
AST109	- 207	- 01	- 00	- 14	- 00	14.71	14.91	15.21	15.46	0	28	2	0	4	4	2	4	56	32	28	2	1194.5
AST109	- 207	- 01	- 07	- 00	- 00	14.71	14.91	15.21	15.46	14	0	2	0	4	4	2	4	28	32	28	2	1161.3
AST109	- 207	- 01	- 00	- 14	- 01	15.21	15.41	15.71	15.96	0	28	2	2	4	4	2	4	60	34	28	4	1251.1
AST109	- 207	- 01	- 07	- 00	- 01	15.21	15.41	15.71	15.96	14	0	2	2	4	4	2	4	32	34	28	4	1217.9
AST109	- 207	- 01	- 00	- 15	- 00	15.71	15.91	16.21	16.46	0	30	2	0	4	4	2	4	60	34	30	2	1267.6
AST109	- 207	- 01	- 07	- 01	- 00	15.71	15.91	16.21	16.46	14	2	2	0	4	4	2	4	32	34	30	2	1234.5
AST109	- 207	- 01	- 00	- 15	- 01	16.21	16.41	16.71	16.96	0	30	2	2	4	4	2	4	64	36	30	4	1324.3
AST109	- 207	- 01	- 07	- 01	- 01	16.21	16.41	16.71	16.96	14	2	2	2	4	4	2	4	36	36	30	4	1291.1
AST109	- 207	- 01	- 00	- 16	- 00	16.71	16.91	17.21	17.46	0	32	2	0	4	4	2	4	64	36	32	2	1340.8
AST109	- 207	- 01	- 08	- 00	- 00	16.71	16.91	17.21	17.46	16	0	2	0	4	4	2	4	32	36	32	2	1302.9
AST109	- 207	- 01	- 00	- 16	- 01	17.21	17.41	17.71	17.96	0	32	2	2	4	4	2	4	68	38	32	4	1397.5
AST109	- 207	- 01	- 08	- 00	- 01	17.21	17.41	17.71	17.96	16	0	2	2	4	4	2	4	36	38	32	4	1359.5
AST109	- 207	- 01	- 00	- 17	- 00	17.71	17.91	18.21	18.46	0	34	2	0	4	4	2	4	68	38	34	2	1414.0
AST109	- 207	- 01	- 08	- 01	- 00	17.71	17.91	18.21	18.46	16	2	2	0	4	4	2	4	36	38	34	2	1376.1
AST109	- 207	- 01	- 00	- 17	- 01	18.21	18.41	18.71	18.96	0	34	2	2	4	4	2	4	72	40	34	4	1470.6
AST109	- 207	- 01	- 08	- 01	- 01	18.21	18.41	18.71	18.96	16	2	2	2	4	4	2	4	40	40	34	4	1432.7
AST109	- 207	- 01	- 00	- 18	- 00	18.71	18.91	19.21	19.46	0	36	2	0	4	4	2	4	72	40	36	2	1487.2
AST109	- 207	- 01	- 09	- 00	- 00	18.71	18.91	19.21	19.46	18	0	2	0	4	4	2	4	36	40	36	2	1444.5

Altrad Shoring Tower - AST109	1.09 mx2.57 m	Number of frame levels 0.71 m	Number of frame levels 2.0 m	Number of frame levels 1.0 m	Number of frame levels 0.5 m	Total height without head and base	Minimum tower height H_{min}	Average tower height	Maximum tower height H_{max}	Components of AST Tower 1.09-2.57 m												
										Steel frame 2.0x1.09 m	Steel frame 1.0x1.09 m	Steel frame 0.7x1.09 m	Steel frame 0.50x1.09 m	Adjustable base 0.6 m	Cross threaded head 0.45 m	Horizontal brace 1.09x2.57 m	Base connector	Safety cotter	Horizontal transom 2.57 m	Vertical brace 1.0x2.57 m	Vertical brace 0.5x2.57 m	
										A5221109	A5211109	A5212109	A5210109	A5201060	A5202045	A5208250	A5201001	MP112	E371825	E373225	E373226	
										Component weight [kg]												Weight [kg]
							s-10/10	s-30/20	s-39/26	40.3	21.3	17.5	13.5	6.49	11	10.7	0.87	0.07	9.07	9.46	9.03	
AST109	- 257	- 01	- 00	- 00	- 00	0.71	1.06	1.21	1.46	0	0	2	0	4	4	2	4	0	4	0	2	184.0
AST109	- 257	- 01	- 00	- 00	- 01	1.21	1.41	1.71	1.96	0	0	2	2	4	4	2	4	4	6	0	4	247.5
AST109	- 257	- 01	- 00	- 01	- 00	1.71	1.91	2.21	2.46	0	2	2	0	4	4	2	4	4	6	2	2	263.9
AST109	- 257	- 01	- 00	- 01	- 01	2.21	2.41	2.71	2.96	0	2	2	2	4	4	2	4	8	8	2	4	327.4
AST109	- 257	- 01	- 00	- 02	- 00	2.71	2.91	3.21	3.46	0	4	2	0	4	4	2	4	8	8	4	2	343.7
AST109	- 257	- 01	- 01	- 00	- 00	2.71	2.91	3.21	3.46	2	0	2	0	4	4	2	4	4	8	4	2	339.0
AST109	- 257	- 01	- 00	- 02	- 01	3.21	3.41	3.71	3.96	0	2	2	2	4	4	2	4	12	10	4	4	364.7
AST109	- 257	- 01	- 01	- 00	- 01	3.21	3.41	3.71	3.96	2	0	2	2	4	4	2	4	8	10	4	4	402.5
AST109	- 257	- 01	- 00	- 03	- 00	3.71	3.91	4.21	4.46	0	6	2	0	4	4	2	4	12	10	6	2	423.6
AST109	- 257	- 01	- 01	- 01	- 00	3.71	3.91	4.21	4.46	2	2	2	0	4	4	2	4	8	10	6	2	418.8
AST109	- 257	- 01	- 00	- 03	- 01	4.21	4.41	4.71	4.96	0	6	2	2	4	4	2	4	16	12	6	4	487.1
AST109	- 257	- 01	- 01	- 01	- 01	4.21	4.41	4.71	4.96	2	2	2	2	4	4	2	4	12	12	6	4	482.3
AST109	- 257	- 01	- 00	- 04	- 00	4.71	4.91	5.21	5.46	0	8	2	0	4	4	2	4	16	12	8	2	503.4
AST109	- 257	- 01	- 02	- 00	- 00	4.71	4.91	5.21	5.46	4	0	2	0	4	4	2	4	8	12	8	2	493.9
AST109	- 257	- 01	- 00	- 04	- 01	5.21	5.41	5.71	5.96	0	8	2	2	4	4	2	4	20	14	8	4	566.9
AST109	- 257	- 01	- 02	- 00	- 01	5.21	5.41	5.71	5.96	4	0	2	2	4	4	2	4	12	14	8	4	557.4
AST109	- 257	- 01	- 00	- 05	- 00	5.71	5.91	6.21	6.46	0	10	2	0	4	4	2	4	20	14	10	2	583.2
AST109	- 257	- 01	- 02	- 01	- 00	5.71	5.91	6.21	6.46	4	2	2	0	4	4	2	4	12	14	10	2	573.8
AST109	- 257	- 01	- 00	- 05	- 01	6.21	6.41	6.71	6.96	0	10	2	2	4	4	2	4	24	16	10	4	646.7
AST109	- 257	- 01	- 02	- 01	- 01	6.21	6.41	6.71	6.96	4	2	2	2	4	4	2	4	16	16	10	4	637.3
AST109	- 257	- 01	- 00	- 06	- 00	6.71	6.91	7.21	7.46	0	12	2	0	4	4	2	4	24	16	12	2	663.1
AST109	- 257	- 01	- 03	- 00	- 00	6.71	6.91	7.21	7.46	6	0	2	0	4	4	2	4	12	16	12	2	648.9
AST109	- 257	- 01	- 00	- 06	- 01	7.21	7.41	7.71	7.96	0	12	2	2	4	4	2	4	28	18	12	4	726.6
AST109	- 257	- 01	- 03	- 00	- 01	7.21	7.41	7.71	7.96	6	0	2	2	4	4	2	4	16	18	12	4	712.4
AST109	- 257	- 01	- 00	- 07	- 00	7.71	7.91	8.21	8.46	0	14	2	0	4	4	2	4	28	18	14	2	742.9
AST109	- 257	- 01	- 03	- 01	- 00	7.71	7.91	8.21	8.46	6	2	2	0	4	4	2	4	16	18	14	2	728.7
AST109	- 257	- 01	- 00	- 07	- 01	8.21	8.41	8.71	8.96	0	14	2	2	4	4	2	4	32	20	14	4	806.4
AST109	- 257	- 01	- 03	- 01	- 01	8.21	8.41	8.71	8.96	6	2	2	2	4	4	2	4	20	20	14	4	792.2
AST109	- 257	- 01	- 00	- 08	- 00	8.71	8.91	9.21	9.46	0	16	2	0	4	4	2	4	32	20	16	2	822.8
AST109	- 257	- 01	- 04	- 00	- 00	8.71	8.91	9.21	9.46	8	0	2	0	4	4	2	4	16	20	16	2	803.8
AST109	- 257	- 01	- 00	- 08	- 01	9.21	9.41	9.71	9.96	0	16	2	2	4	4	2	4	36	22	16	4	886.3
AST109	- 257	- 01	- 04	- 00	- 01	9.21	9.41	9.71	9.96	8	0	2	2	4	4	2	4	20	22	16	4	867.3
AST109	- 257	- 01	- 00	- 09	- 00	9.71	9.91	10.21	10.46	0	18	2	0	4	4	2	4	36	22	18	2	902.6
AST109	- 257	- 01	- 04	- 01	- 00	9.71	9.91	10.21	10.46	8	2	2	0	4	4	2	4	20	22	18	2	883.6
AST109	- 257	- 01	- 00	- 09	- 01	10.21	10.41	10.71	10.96	0	18	2	2	4	4	2	4	40	24	18	4	966.1
AST109	- 257	- 01	- 04	- 01	- 01	10.21	10.41	10.71	10.96	8	2	2	2	4	4	2	4	24	24	18	4	947.1
AST109	- 257	- 01	- 00	- 10	- 00	10.71	10.91	11.21	11.46	0	20	2	0	4	4	2	4	40	24	20	2	982.4
AST109	- 257	- 01	- 05	- 00	- 00	10.71	10.91	11.21	11.46	10	0	2	0	4	4	2	4	20	24	20	2	958.7
AST109	- 257	- 01	- 00	- 10	- 01	11.21	11.41	11.71	11.96	0	20	2	2	4	4	2	4	44	26	20	4	1045.9
AST109	- 257	- 01	- 05	- 00	- 01	11.21	11.41	11.71	11.96	10	0	2	2	4	4	2	4	24	26	20	4	1022.2
AST109	- 257	- 01	- 00	- 11	- 00	11.71	11.91	12.21	12.46	0	22	2	0	4	4	2	4	44	26	22	2	1062.3
AST109	- 257	- 01	- 05	- 01	- 00	11.71	11.91	12.21	12.46	10	2	2	0	4	4	2	4	24	26	22	2	1038.6
AST109	- 257	- 01	- 00	- 11	- 01	12.21	12.41	12.71	12.96	0	22	2	2	4	4	2	4	48	28	22	4	1125.8
AST109	- 257	- 01	- 05	- 01	- 01	12.21	12.41	12.71	12.96	10	2	2	2	4	4	2	4	28	28	22	4	1102.1
AST109	- 257	- 01	- 00	- 12	- 00	12.71	12.91	13.21	13.46	0	24	2	0	4	4	2	4	48	28	24	2	1142.1
AST109	- 257	- 01	- 06	- 00	- 00	12.71	12.91	13.21	13.46	12	0	2	0	4	4	2	4	24	28	24	2	1113.7
AST109	- 257	- 01	- 00	- 12	- 01	13.21	13.41	13.71	13.96	0	24	2	2	4	4	2	4	52	30	24	4	1205.6
AST109	- 257	- 01	- 06	- 00	- 01	13.21	13.41	13.71	13.96	12	0	2	2	4	4	2	4	28	30	24	4	1177.2
AST109	- 257	- 01	- 00	- 13	- 00	13.71	13.91	14.21	14.46	0	26	2	0	4	4	2	4	52	30	26	2	1222.0
AST109	- 257	- 01	- 06	- 01	- 00	13.71	13.91	14.21	14.46	12	2	2	0	4	4	2	4	28	30	26	2	1193.5
AST109	- 257	- 01	- 00	- 13	- 01	14.21	14.41	14.71	14.96	0	26	2	2	4	4	2	4	56	32	26	4	1285.5
AST109	- 257	- 01	- 06	- 01	- 01	14.21	14.41	14.71	14.96	12	2	2	2	4	4	2	4	32	32	26	4	1257.0
AST109	- 257	- 01	- 00	- 14	- 00	14.71	14.91	15.21	15.46	0	28	2	0	4	4	2	4	56	32	28	2	1301.8
AST109	- 257	- 01	- 07	- 00	- 00	14.71	14.91	15.21	15.46	14	0	2	0	4	4	2	4	28	32	28	2	1268.6
AST109	- 257	- 01	- 00	- 14	- 01	15.21	15.41	15.71	15.96	0	28	2	2	4	4	2	4	60	34	28	4	1365.3
AST109	- 257	- 01	- 07	- 00	- 01	15.21	15.41	15.71	15.96	14	0	2	2	4	4	2	4	32	34	28	4	1332.1
AST109	- 257	- 01	- 00	- 15	- 00	15.71	15.91	16.21	16.46	0	30	2	0	4	4	2	4	60	34	30	2	1381.6
AST109	- 257	- 01	- 07	- 01	- 00	15.71	15.91	16.21	16.46	14	2	2	0	4	4	2	4	32	34	30	2	1348.5
AST109	- 257	- 01	- 00	- 15	- 01	16.21	16.41	16.71	16.96	0	30	2	2	4	4	2	4	64	36	30	4	1445.1
AST109	- 257	- 01	- 07	- 01	- 01	16.21	16.41	16.71	16.96	14	2	2	2	4	4	2	4	36	36	30	4	1412.0
AST109	- 257	- 01	- 00	- 16	- 00	16.71	16.91	17.21	17.46	0	32	2	0	4	4	2	4	64	36	32	2	1461.5
AST109	- 257	- 01	- 08	- 00	- 00	16.71	16.91	17.21	17.46	16	0	2	0	4	4	2	4	32	36	32	2	1423.6
AST109	- 257	- 01	- 00	- 16	- 01	17.21	17.41	17.71	17.96	0	32	2	2	4	4	2	4	68	38	32	4	1525.0
AST109	- 257	- 01	- 08	- 00	- 01	17.21	17.41	17.71	17.96	16	0	2	2	4	4	2	4	36	38	32	4	1487.1
AST109	- 257	- 01	- 00	- 17	- 00	17.71	17.91	18.21	18.46	0	34	2	0	4	4	2	4	68	38	34	2	1541.3
AST109	- 257	- 01	- 08	- 01	- 00	17.71	17.91	18.21	18.46	16	2	2	0	4	4	2	4	36	38	34	2	1503.4
AST109	- 257	- 01	- 00	- 17	- 01	18.21	18.41	18.71	18.96	0	34	2	2	4	4	2	4	72	40	34	4	1604.8
AST109	- 257	- 01	- 08	- 01	- 01	18.21	18.41	18.71	18.96	16	2	2	2	4	4	2	4	40	40	34	4	1566.9
AST109	- 257	- 01	- 00	- 18	- 00	18.71	18.91	19.21	19.46	0	36	2	0	4	4	2	4	72	40	36	2	1621.2
AST109	- 257	- 01	- 09	- 00	- 00	18.71	18.91	19.21	19.46	18	0	2	0	4	4	2	4	36	40	36	2	1578.5

Components of AST Tower 1.09-3.07 m

Altrad Shoring Tower - Altrad -AST109	1.09 mx3.07 m	Number of frame levels 0.71 m	Number of frame levels 2.0 m	Number of frame levels 1.0 m	Number of frame levels 0.5 m	Total height without head and base	Minimum tower height H_{min}	Average tower height	Maximum tower height H_{max}	Steel frame 2.0x1.09 m	Steel frame 1.0x1.09 m	Steel frame 0.7x1.09 m	Steel frame 0.50x1.09 m	Adjustable base 0.6 m	Cross threaded head 0.45 m	Horizontal brace 1.09x3.07 m	Base connector	Safety cotter	Horizontal transom 3.07 m	Vertical brace 1.0x3.07 m	Vertical brace 0.5x3.07 m	
										A5221109	A5211109	A5212109	A5210109	A5201060	A5202045	A5208300	A5201001	MP112	E371830	E373230	E373231	
										Component weight [kg]												Weight [kg]
							s-10/10	s-30/20	s-39/26	40.27	21.25	17.46	13.51	6.49	10.98	12.47	0.87	0.07	10.14	10.83	10.48	
AST109	- 307	- 01	- 00	- 00	- 00	0.71	1.06	1.21	1.46	0	0	2	0	4	4	2	4	0	4	0	2	194.7
AST109	- 307	- 01	- 00	- 00	- 01	1.21	1.41	1.71	1.96	0	0	2	2	4	4	2	4	4	6	0	4	263.3
AST109	- 307	- 01	- 00	- 01	- 00	1.71	1.91	2.21	2.46	0	2	2	0	4	4	2	4	4	6	2	2	279.5
AST109	- 307	- 01	- 00	- 01	- 01	2.21	2.41	2.71	2.96	0	2	2	2	4	4	2	4	8	8	2	4	348.0
AST109	- 307	- 01	- 00	- 02	- 00	2.71	2.91	3.21	3.46	0	4	2	0	4	4	2	4	8	8	4	2	364.2
AST109	- 307	- 01	- 01	- 00	- 00	2.71	2.91	3.21	3.46	2	0	2	0	4	4	2	4	4	8	4	2	359.4
AST109	- 307	- 01	- 00	- 02	- 01	3.21	3.41	3.71	3.96	0	2	2	2	4	4	2	4	12	10	4	4	390.2
AST109	- 307	- 01	- 01	- 00	- 01	3.21	3.41	3.71	3.96	2	0	2	2	4	4	2	4	8	10	4	4	428.0
AST109	- 307	- 01	- 00	- 03	- 00	3.71	3.91	4.21	4.46	0	6	2	0	4	4	2	4	12	10	6	2	448.9
AST109	- 307	- 01	- 01	- 01	- 00	3.71	3.91	4.21	4.46	2	2	2	0	4	4	2	4	8	10	6	2	444.2
AST109	- 307	- 01	- 00	- 03	- 01	4.21	4.41	4.71	4.96	0	6	2	2	4	4	2	4	16	12	6	4	517.4
AST109	- 307	- 01	- 01	- 01	- 01	4.21	4.41	4.71	4.96	2	2	2	2	4	4	2	4	12	12	6	4	512.7
AST109	- 307	- 01	- 00	- 04	- 00	4.71	4.91	5.21	5.46	0	8	2	0	4	4	2	4	16	12	8	2	533.6
AST109	- 307	- 01	- 02	- 00	- 00	4.71	4.91	5.21	5.46	4	0	2	0	4	4	2	4	8	12	8	2	524.1
AST109	- 307	- 01	- 00	- 04	- 01	5.21	5.41	5.71	5.96	0	8	2	2	4	4	2	4	20	14	8	4	602.2
AST109	- 307	- 01	- 02	- 00	- 01	5.21	5.41	5.71	5.96	4	0	2	2	4	4	2	4	12	14	8	4	592.7
AST109	- 307	- 01	- 00	- 05	- 00	5.71	5.91	6.21	6.46	0	10	2	0	4	4	2	4	20	14	10	2	618.3
AST109	- 307	- 01	- 02	- 01	- 00	5.71	5.91	6.21	6.46	4	2	2	0	4	4	2	4	12	14	10	2	608.9
AST109	- 307	- 01	- 00	- 05	- 01	6.21	6.41	6.71	6.96	0	10	2	2	4	4	2	4	24	16	10	4	686.9
AST109	- 307	- 01	- 02	- 01	- 01	6.21	6.41	6.71	6.96	4	2	2	2	4	4	2	4	16	16	10	4	677.4
AST109	- 307	- 01	- 00	- 06	- 00	6.71	6.91	7.21	7.46	0	12	2	0	4	4	2	4	24	16	12	2	703.1
AST109	- 307	- 01	- 03	- 00	- 00	6.71	6.91	7.21	7.46	6	0	2	0	4	4	2	4	12	16	12	2	688.8
AST109	- 307	- 01	- 00	- 06	- 01	7.21	7.41	7.71	7.96	0	12	2	2	4	4	2	4	28	18	12	4	771.6
AST109	- 307	- 01	- 03	- 00	- 01	7.21	7.41	7.71	7.96	6	0	2	2	4	4	2	4	16	18	12	4	757.4
AST109	- 307	- 01	- 00	- 07	- 00	7.71	7.91	8.21	8.46	0	14	2	0	4	4	2	4	28	18	14	2	787.8
AST109	- 307	- 01	- 03	- 01	- 00	7.71	7.91	8.21	8.46	6	2	2	0	4	4	2	4	16	18	14	2	773.6
AST109	- 307	- 01	- 00	- 07	- 01	8.21	8.41	8.71	8.96	0	14	2	2	4	4	2	4	32	20	14	4	856.3
AST109	- 307	- 01	- 03	- 01	- 01	8.21	8.41	8.71	8.96	6	2	2	2	4	4	2	4	20	20	14	4	842.1
AST109	- 307	- 01	- 00	- 08	- 00	8.71	8.91	9.21	9.46	0	16	2	0	4	4	2	4	32	20	16	2	872.5
AST109	- 307	- 01	- 04	- 00	- 00	8.71	8.91	9.21	9.46	8	0	2	0	4	4	2	4	16	20	16	2	853.5
AST109	- 307	- 01	- 00	- 08	- 01	9.21	9.41	9.71	9.96	0	16	2	2	4	4	2	4	36	22	16	4	941.0
AST109	- 307	- 01	- 04	- 00	- 01	9.21	9.41	9.71	9.96	8	0	2	2	4	4	2	4	20	22	16	4	922.1
AST109	- 307	- 01	- 00	- 09	- 00	9.71	9.91	10.21	10.46	0	18	2	0	4	4	2	4	36	22	18	2	957.2
AST109	- 307	- 01	- 04	- 01	- 00	9.71	9.91	10.21	10.46	8	2	2	0	4	4	2	4	20	22	18	2	938.3
AST109	- 307	- 01	- 00	- 09	- 01	10.21	10.41	10.71	10.96	0	18	2	2	4	4	2	4	40	24	18	4	1025.8
AST109	- 307	- 01	- 04	- 01	- 01	10.21	10.41	10.71	10.96	8	2	2	2	4	4	2	4	24	24	18	4	1006.8
AST109	- 307	- 01	- 00	- 10	- 00	10.71	10.91	11.21	11.46	0	20	2	0	4	4	2	4	40	24	20	2	1041.9
AST109	- 307	- 01	- 05	- 00	- 00	10.71	10.91	11.21	11.46	10	0	2	0	4	4	2	4	20	24	20	2	1018.2
AST109	- 307	- 01	- 00	- 10	- 01	11.21	11.41	11.71	11.96	0	20	2	2	4	4	2	4	44	26	20	4	1110.5
AST109	- 307	- 01	- 05	- 00	- 01	11.21	11.41	11.71	11.96	10	0	2	2	4	4	2	4	24	26	20	4	1086.8
AST109	- 307	- 01	- 00	- 11	- 00	11.71	11.91	12.21	12.46	0	22	2	0	4	4	2	4	44	26	22	2	1126.7
AST109	- 307	- 01	- 05	- 01	- 00	11.71	11.91	12.21	12.46	10	2	2	0	4	4	2	4	24	26	22	2	1103.0
AST109	- 307	- 01	- 00	- 11	- 01	12.21	12.41	12.71	12.96	0	22	2	2	4	4	2	4	48	28	22	4	1195.2
AST109	- 307	- 01	- 05	- 01	- 01	12.21	12.41	12.71	12.96	10	2	2	2	4	4	2	4	28	28	22	4	1171.5
AST109	- 307	- 01	- 00	- 12	- 00	12.71	12.91	13.21	13.46	0	24	2	0	4	4	2	4	48	28	24	2	1211.4
AST109	- 307	- 01	- 06	- 00	- 00	12.71	12.91	13.21	13.46	12	0	2	0	4	4	2	4	24	28	24	2	1182.9
AST109	- 307	- 01	- 00	- 12	- 01	13.21	13.41	13.71	13.96	0	24	2	2	4	4	2	4	52	30	24	4	1279.9
AST109	- 307	- 01	- 06	- 00	- 01	13.21	13.41	13.71	13.96	12	0	2	2	4	4	2	4	28	30	24	4	1251.5
AST109	- 307	- 01	- 00	- 13	- 00	13.71	13.91	14.21	14.46	0	26	2	0	4	4	2	4	52	30	26	2	1296.1
AST109	- 307	- 01	- 06	- 01	- 00	13.71	13.91	14.21	14.46	12	2	2	0	4	4	2	4	28	30	26	2	1267.7
AST109	- 307	- 01	- 00	- 13	- 01	14.21	14.41	14.71	14.96	0	26	2	2	4	4	2	4	56	32	26	4	1364.6
AST109	- 307	- 01	- 06	- 01	- 01	14.21	14.41	14.71	14.96	12	2	2	2	4	4	2	4	32	32	26	4	1336.2
AST109	- 307	- 01	- 00	- 14	- 00	14.71	14.91	15.21	15.46	0	28	2	0	4	4	2	4	56	32	28	2	1380.8
AST109	- 307	- 01	- 07	- 00	- 00	14.71	14.91	15.21	15.46	14	0	2	0	4	4	2	4	28	32	28	2	1347.6
AST109	- 307	- 01	- 00	- 14	- 01	15.21	15.41	15.71	15.96	0	28	2	2	4	4	2	4	60	34	28	4	1449.4
AST109	- 307	- 01	- 07	- 00	- 01	15.21	15.41	15.71	15.96	14	0	2	2	4	4	2	4	32	34	28	4	1416.2
AST109	- 307	- 01	- 00	- 15	- 00	15.71	15.91	16.21	16.46	0	30	2	0	4	4	2	4	60	34	30	2	1465.5
AST109	- 307	- 01	- 07	- 01	- 00	15.71	15.91	16.21	16.46	14	2	2	0	4	4	2	4	32	34	30	2	1432.4
AST109	- 307	- 01	- 00	- 15	- 01	16.21	16.41	16.71	16.96	0	30	2	2	4	4	2	4	64	36	30	4	1534.1
AST109	- 307	- 01	- 07	- 01	- 01	16.21	16.41	16.71	16.96	14	2	2	2	4	4	2	4	36	36	30	4	1500.9
AST109	- 307	- 01	- 00	- 16	- 00	16.71	16.91	17.21	17.46	0	32	2	0	4	4	2	4	64	36	32	2	1550.3
AST109	- 307	- 01	- 08	- 00	- 00	16.71	16.91	17.21	17.46	16	0	2	0	4	4	2	4	32	36	32	2	1512.3
AST109	- 307	- 01	- 00	- 16	- 01	17.21	17.41	17.71	17.96	0	32	2	2	4	4	2	4	68	38	32	4	1618.8
AST109	- 307	- 01	- 08	- 00	- 01	17.21	17.41	17.71	17.96	16	0	2	2	4	4	2	4	36	38	32	4	1580.9
AST109	- 307	- 01	- 00	- 17	- 00	17.71	17.91	18.21	18.46	0	34	2	0	4	4	2	4	68	38	34	2	1635.0
AST109	- 307	- 01	- 08	- 01	- 00	17.71	17.91	18.21	18.46	16	2	2	0	4	4	2	4	36	38	34	2	1597.1
AST109	- 307	- 01	- 00	- 17	- 01	18.21	18.41	18.71	18.96	0	34	2	2	4	4	2	4	72	40	34	4	1703.5
AST109	- 307	- 01	- 08	- 01	- 01	18.21	18.41	18.71	18.96	16	2	2	2	4	4	2	4	40	40	34	4	1665.6
AST109	- 307	- 01	- 00	- 18	- 00	18.71	18.91	19.21	19.46	0	36	2	0	4	4	2	4	72	40	36	2	1719.7
AST109	- 307	- 01	- 09	- 00	- 00	18.71	18.91	19.21	19.46	18	0	2	0	4	4	2	4	36	40	36	2	1677.0

3. LOCKED HEAD TOWERS

3.1 Static diagram

For the locked head towers the load included:

- dead weight,
- wind load,
- vertical force *Fv*,
- bending moment of *Fv*·5 mm
  (according to the recommendations of PN-EN 12812 sec. 9.3.6).

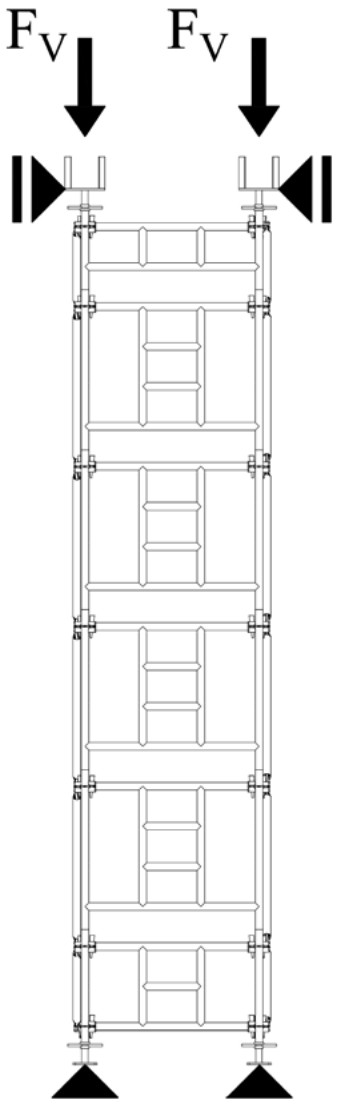

Fig. 3.1

Static diagram of the locked head tower

3.2 Locked AST109-109 tower

As a result of the numerical analyses carried out the values of the permissible load *Fv* acting on a single rack of the AST109-109 tower as well as the values of the minimum required load acting on a single rack to prevent the base from slipping *Fv min*. were determined. When the value of the permissible load *Fv* was lower than the value of the minimum required load of a single rack to prevent slipping of the base *Fv min*, the result was rejected and no interpolation was made with it. The results are summarized in Tab. 3.1. The "-" sign in Tab. 3.1 means the situation when *Fv*< *Fv min*. In addition, an example of the graphical summary of the results in the form of graphs for different levels of wind load and different levels of the base and heads protrusion Sc was presented (Fig. 3.2).

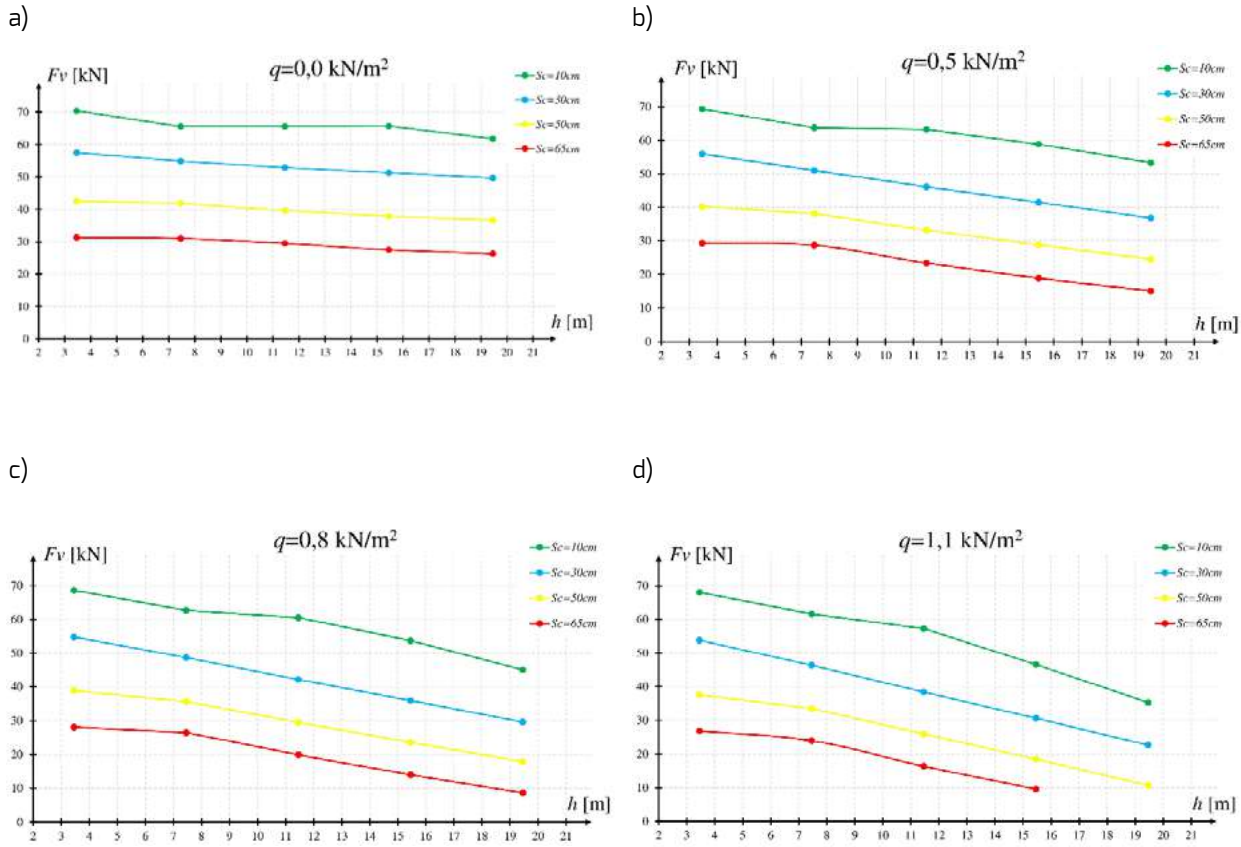

Fig. 3.2

Permissible load of a single rack of the AST109-109 tower with different wind load:

a) q=0.0 kN/m², b) q=0.5 kN/m², c) q=0.8 kN/m², q=1.1 kN/m²

Tab. 3.1 Permissible characteristic (actually occurring on site) loads of locked AST109-109 towers

LOCKED TOWER			AST109-109																Minimum Required Load of a Single Rack to Prevent the Base from Slipping Fv_{min} [kN]		
			Permissible load Fv per Single Tower Rack [kN]																		
			$S_{integr.}$=10 cm (S_p=6 cm; S_g=4 cm)				$S_{integr.}$=30 cm (S_p=18 cm; S_g=12 cm)				$S_{integr.}$=50 cm (S_p=30 cm; S_g=20 cm)				$S_{integr.}$=65 cm (S_p=40 cm; S_g=25 cm)						
Tower name	H_{min} [m]	H_{max} [m]	Wind pressure q [kN/m²]				Wind pressure q [kN/m²]				Wind pressure q [kN/m²]				Wind pressure q [kN/m²]				Wind pressure q [kN/m²]		
			0.0	0.5	0.8	1.1	0.0	0.5	0.8	1.1	0.0	0.5	0.8	1.1	0.0	0.5	0.8	1.1	0.5	0.8	1.1
AST109-109-01-00-00-01	1.41	1.96	70.4	69.3	68.6	68.0	57.5	55.9	54.8	53.8	42.5	40.2	38.9	37.6	31.3	29.3	28.1	26.9	0.1	0.5	0.8
AST109-109-01-00-01-00	1.91	2.46	70.4	69.3	68.6	68.0	57.5	55.9	54.8	53.8	42.5	40.2	38.9	37.6	31.3	29.3	28.1	26.9	0.2	0.6	1.0
AST109-109-01-00-01-01	2.41	2.96	70.4	69.3	68.6	68.0	57.5	55.9	54.8	53.8	42.5	40.2	38.9	37.6	31.3	29.3	28.1	26.9	0.3	0.8	1.3
AST109-109-01-00-02-00	2.91	3.46	70.4	69.3	68.6	68.0	57.5	55.9	54.8	53.8	42.5	40.2	38.9	37.6	31.3	29.3	28.1	26.9	0.4	0.9	1.5
AST109-109-01-01-00-00	2.91	3.46	70.4	69.3	68.6	68.0	57.5	55.9	54.8	53.8	42.5	40.2	38.9	37.6	31.3	29.3	28.1	26.9	0.4	0.9	1.5
AST109-109-01-00-02-01	3.41	3.96	69.2	67.9	67.1	66.4	56.9	54.7	53.3	52.0	42.4	39.7	38.1	36.6	31.2	29.2	27.7	26.2	0.4	1.1	1.8
AST109-109-01-01-00-01	3.41	3.96	69.2	67.9	67.1	66.4	56.9	54.7	53.3	52.0	42.4	39.7	38.1	36.6	31.2	29.2	27.7	26.2	0.4	1.1	1.7
AST109-109-01-00-03-00	3.91	4.46	69.2	67.9	67.1	66.4	56.9	54.7	53.3	52.0	42.4	39.7	38.1	36.6	31.2	29.2	27.7	26.2	0.5	1.2	2.0
AST109-109-01-01-01-00	3.91	4.46	69.2	67.9	67.1	66.4	56.9	54.7	53.3	52.0	42.4	39.7	38.1	36.6	31.2	29.2	27.7	26.2	0.5	1.2	2.0
AST109-109-01-00-03-01	4.41	4.96	68.0	66.5	65.7	64.8	56.2	53.5	51.8	50.1	42.2	39.2	37.3	35.6	31.2	29.0	27.3	25.5	0.6	1.4	2.2
AST109-109-01-01-01-01	4.41	4.96	68.0	66.5	65.7	64.8	56.2	53.5	51.8	50.1	42.2	39.2	37.3	35.6	31.2	29.0	27.3	25.5	0.6	1.4	2.2
AST109-109-01-00-04-00	4.91	5.46	68.0	66.5	65.7	64.8	56.2	53.5	51.8	50.1	42.2	39.2	37.3	35.6	31.2	29.0	27.3	25.5	0.6	1.6	2.5
AST109-109-01-02-00-00	4.91	5.46	68.0	66.5	65.7	64.8	56.2	53.5	51.8	50.1	42.2	39.2	37.3	35.6	31.2	29.0	27.3	25.5	0.6	1.6	2.5
AST109-109-01-00-04-01	5.41	5.96	66.8	65.1	64.2	63.2	55.6	52.2	50.2	48.3	42.1	38.6	36.5	34.5	31.1	28.9	26.9	24.7	0.7	1.7	2.7
AST109-109-01-02-00-01	5.41	5.96	66.8	65.1	64.2	63.2	55.6	52.2	50.2	48.3	42.1	38.6	36.5	34.5	31.1	28.9	26.9	24.7	0.7	1.7	2.7
AST109-109-01-00-05-00	5.91	6.46	66.8	65.1	64.2	63.2	55.6	52.2	50.2	48.3	42.1	38.6	36.5	34.5	31.1	28.9	26.9	24.7	0.8	1.9	3.0
AST109-109-01-02-01-00	5.91	6.46	66.8	65.1	64.2	63.2	55.6	52.2	50.2	48.3	42.1	38.6	36.5	34.5	31.1	28.9	26.9	24.7	0.8	1.9	2.9
AST109-109-01-00-05-01	6.41	6.96	65.6	63.7	62.7	61.6	54.9	51.0	48.7	46.4	41.9	38.1	35.7	33.5	31.0	28.7	26.5	24.0	0.8	2.0	3.2
AST109-109-01-02-01-01	6.41	6.96	65.6	63.7	62.7	61.6	54.9	51.0	48.7	46.4	41.9	38.1	35.7	33.5	31.0	28.7	26.5	24.0	0.8	2.0	3.2
AST109-109-01-00-06-00	6.91	7.46	65.6	63.7	62.7	61.6	54.9	51.0	48.7	46.4	41.9	38.1	35.7	33.5	31.0	28.7	26.5	24.0	0.9	2.2	3.5
AST109-109-01-03-00-00	6.91	7.46	65.6	63.7	62.7	61.6	54.9	51.0	48.7	46.4	41.9	38.1	35.7	33.5	31.0	28.7	26.5	24.0	0.9	2.2	3.4
AST109-109-01-00-06-01	7.41	7.96	65.6	63.6	62.2	60.5	54.4	49.8	47.1	44.4	41.3	36.9	34.2	31.6	30.6	27.4	24.9	22.1	1.0	2.3	3.7
AST109-109-01-03-00-01	7.41	7.96	65.6	63.6	62.2	60.5	54.4	49.8	47.1	44.4	41.3	36.9	34.2	31.6	30.6	27.4	24.9	22.1	1.0	2.3	3.7
AST109-109-01-00-07-00	7.91	8.46	65.6	63.6	62.2	60.5	54.4	49.8	47.1	44.4	41.3	36.9	34.2	31.6	30.6	27.4	24.9	22.1	1.1	2.5	3.9
AST109-109-01-03-01-00	7.91	8.46	65.6	63.6	62.2	60.5	54.4	49.8	47.1	44.4	41.3	36.9	34.2	31.6	30.6	27.4	24.9	22.1	1.1	2.5	3.9
AST109-109-01-00-07-01	8.41	8.96	65.6	63.5	61.6	59.4	53.9	48.6	45.5	42.4	40.8	35.7	32.6	29.8	30.3	26.1	23.2	20.2	1.1	2.7	4.2
AST109-109-01-03-01-01	8.41	8.96	65.6	63.5	61.6	59.4	53.9	48.6	45.5	42.4	40.8	35.7	32.6	29.8	30.3	26.1	23.2	20.2	1.1	2.6	4.2
AST109-109-01-00-08-00	8.91	9.46	65.6	63.5	61.6	59.4	53.9	48.6	45.5	42.4	40.8	35.7	32.6	29.8	30.3	26.1	23.2	20.2	1.2	2.8	4.4

Tab. 3.1 cont.

LOCKED TOWER			AST109-109																Minimum Required Load of a Single Rack to Prevent the Base from Slipping Fv_{min} [kN]		
			Permissible load *Fv* per Single Tower Rack [kN]																		
			$S_{integr.}$=10 cm (S_p=6 cm; S_g=4 cm)				$S_{integr.}$=30 cm (S_p=18 cm; S_g=12 cm)				$S_{integr.}$=50 cm (S_p=30 cm; S_g=20 cm)				$S_{integr.}$=65 cm (S_p=40 cm; S_g=25 cm)						
Tower name	H_{min} [m]	H_{max} [m]	Wind pressure q [kN/m²]				Wind pressure q [kN/m²]				Wind pressure q [kN/m²]				Wind pressure q [kN/m²]				Wind pressure q [kN/m²]		
AST109-109-01-04-00-00	8.91	9.46	65.6	63.5	61.6	59.4	53.9	48.6	45.5	42.4	40.8	35.7	32.6	29.8	30.3	26.1	23.2	20.2	1.2	2.8	4.4
AST109-109-01-00-08-01	9.41	9.96	65.6	63.3	61.1	58.3	53.4	47.3	43.8	40.4	40.2	34.4	31.1	27.9	29.9	24.7	21.6	18.3	1.3	3.0	4.7
AST109-109-01-04-00-01	9.41	9.96	65.6	63.3	61.1	58.3	53.4	47.3	43.8	40.4	40.2	34.4	31.1	27.9	29.9	24.7	21.6	18.3	1.3	3.0	4.6
AST109-109-01-00-09-00	9.91	10.46	65.6	63.3	61.1	58.3	53.4	47.3	43.8	40.4	40.2	34.4	31.1	27.9	29.9	24.7	21.6	18.3	1.4	3.1	4.9
AST109-109-01-04-01-00	9.91	10.46	65.6	63.3	61.1	58.3	53.4	47.3	43.8	40.4	40.2	34.4	31.1	27.9	29.9	24.7	21.6	18.3	1.4	3.1	4.9
AST109-109-01-00-09-01	10.41	10.96	65.6	63.2	60.5	57.2	52.9	46.1	42.2	38.4	39.6	33.2	29.5	26.0	29.5	23.4	19.9	16.4	1.4	3.3	5.2
AST109-109-01-04-01-01	10.41	10.96	65.6	63.2	60.5	57.2	52.9	46.1	42.2	38.4	39.6	33.2	29.5	26.0	29.5	23.4	19.9	16.4	1.4	3.3	5.1
AST109-109-01-00-10-00	10.91	11.46	65.6	63.2	60.5	57.2	52.9	46.1	42.2	38.4	39.6	33.2	29.5	26.0	29.5	23.4	19.9	16.4	1.5	3.5	5.4
AST109-109-01-05-00-00	10.91	11.46	65.6	63.2	60.5	57.2	52.9	46.1	42.2	38.4	39.6	33.2	29.5	26.0	29.5	23.4	19.9	16.4	1.5	3.4	5.4
AST109-109-01-00-10-01	11.41	11.96	65.6	62.1	58.8	54.6	52.5	45.0	40.7	36.5	39.2	32.1	28.0	24.1	29.0	22.3	18.4	14.7	1.6	3.6	5.6
AST109-109-01-05-00-01	11.41	11.96	65.6	62.1	58.8	54.6	52.5	45.0	40.7	36.5	39.2	32.1	28.0	24.1	29.0	22.3	18.4	14.7	1.6	3.6	5.6
AST109-109-01-00-11-00	11.91	12.46	65.6	62.1	58.8	54.6	52.5	45.0	40.7	36.5	39.2	32.1	28.0	24.1	29.0	22.3	18.4	14.7	1.7	3.8	5.9
AST109-109-01-05-01-00	11.91	12.46	65.6	62.1	58.8	54.6	52.5	45.0	40.7	36.5	39.2	32.1	28.0	24.1	29.0	22.3	18.4	14.7	1.7	3.8	5.8
AST109-109-01-00-11-01	12.41	12.96	65.7	61.0	57.1	51.9	52.1	43.8	39.1	34.5	38.8	31.0	26.6	22.3	28.5	21.2	16.9	13.0	1.7	3.9	6.1
AST109-109-01-05-01-01	12.41	12.96	65.7	61.0	57.1	51.9	52.1	43.8	39.1	34.5	38.8	31.0	26.6	22.3	28.5	21.2	16.9	13.0	1.7	3.9	6.1
AST109-109-01-00-12-00	12.91	13.46	65.7	61.0	57.1	51.9	52.1	43.8	39.1	34.5	38.8	31.0	26.6	22.3	28.5	21.2	16.9	13.0	1.8	4.1	6.4
AST109-109-01-06-00-00	12.91	13.46	65.7	61.0	57.1	51.9	52.1	43.8	39.1	34.5	38.8	31.0	26.6	22.3	28.5	21.2	16.9	13.0	1.8	4.1	6.3
AST109-109-01-00-12-01	13.41	13.96	65.7	59.9	55.4	49.3	51.7	42.7	37.6	32.6	38.3	29.9	25.1	20.4	28.0	20.0	15.4	11.3	1.9	4.2	6.6
AST109-109-01-06-00-01	13.41	13.96	65.7	59.9	55.4	49.3	51.7	42.7	37.6	32.6	38.3	29.9	25.1	20.4	28.0	20.0	15.4	11.3	1.9	4.2	6.6
AST109-109-01-00-13-00	13.91	14.46	65.7	59.9	55.4	49.3	51.7	42.7	37.6	32.6	38.3	29.9	25.1	20.4	28.0	20.0	15.4	11.3	1.9	4.4	6.9
AST109-109-01-06-01-00	13.91	14.46	65.7	59.9	55.4	49.3	51.7	42.7	37.6	32.6	38.3	29.9	25.1	20.4	28.0	20.0	15.4	11.3	2.0	4.4	6.8
AST109-109-01-00-13-01	14.41	14.96	65.7	58.8	53.7	46.6	51.3	41.5	36.0	30.6	37.9	28.8	23.6	18.5	27.5	18.9	13.9	9.6	2.0	4.6	7.1
AST109-109-01-06-01-01	14.41	14.96	65.7	58.8	53.7	46.6	51.3	41.5	36.0	30.6	37.9	28.8	23.6	18.5	27.5	18.9	13.9	9.6	2.0	4.5	7.1
AST109-109-01-00-14-00	14.91	15.46	65.7	58.8	53.7	46.6	51.3	41.5	36.0	30.6	37.9	28.8	23.6	18.5	27.5	18.9	13.9	9.6	2.1	4.7	7.3
AST109-109-01-07-00-00	14.91	15.46	65.7	58.8	53.7	46.6	51.3	41.5	36.0	30.6	37.9	28.8	23.6	18.5	27.5	18.9	13.9	9.6	2.1	4.7	7.3
AST109-109-01-00-14-01	15.41	15.96	64.7	57.4	51.6	43.8	50.9	40.3	34.4	28.6	37.6	27.8	22.2	16.6	27.2	18.0	12.6	-	2.1	4.9	7.6
AST109-109-01-07-00-01	15.41	15.96	64.7	57.4	51.6	43.8	50.9	40.3	34.4	28.6	37.6	27.8	22.2	16.6	27.2	18.0	12.6	-	2.2	4.8	7.5
AST109-109-01-00-15-00	15.91	16.46	64.7	57.4	51.6	43.8	50.9	40.3	34.4	28.6	37.6	27.8	22.2	16.6	27.2	18.0	12.6	-	2.2	5.0	7.8
AST109-109-01-07-01-00	15.91	16.46	64.7	57.4	51.6	43.8	50.9	40.3	34.4	28.6	37.6	27.8	22.2	16.6	27.2	18.0	12.6	-	2.2	5.0	7.8
AST109-109-01-00-15-01	16.41	16.96	63.8	56.1	49.4	41.0	50.5	39.2	32.8	26.7	37.3	26.7	20.8	14.6	26.9	17.0	11.3	-	2.3	5.2	8.1
AST109-109-01-07-01-01	16.41	16.96	63.8	56.1	49.4	41.0	50.5	39.2	32.8	26.7	37.3	26.7	20.8	14.6	26.9	17.0	11.3	-	2.3	5.2	8.0
AST109-109-01-00-16-00	16.91	17.46	63.8	56.1	49.4	41.0	50.5	39.2	32.8	26.7	37.3	26.7	20.8	14.6	26.9	17.0	11.3	-	2.4	5.3	8.3
AST109-109-01-08-00-00	16.91	17.46	63.8	56.1	49.4	41.0	50.5	39.2	32.8	26.7	37.3	26.7	20.8	14.6	26.9	17.0	11.3	-	2.4	5.3	8.2
AST109-109-01-00-16-01	17.41	17.96	62.8	54.7	47.3	38.1	50.1	38.0	31.2	24.7	36.9	25.7	19.3	12.7	26.6	16.1	9.9	-	2.4	5.5	8.6
AST109-109-01-08-00-01	17.41	17.96	62.8	54.7	47.3	38.1	50.1	38.0	31.2	24.7	36.9	25.7	19.3	12.7	26.6	16.1	9.9	-	2.4	5.5	8.5
AST109-109-01-00-17-00	17.91	18.46	62.8	54.7	47.3	38.1	50.1	38.0	31.2	24.7	36.9	25.7	19.3	12.7	26.6	16.1	9.9	-	2.5	5.7	8.8
AST109-109-01-08-01-00	17.91	18.46	62.8	54.7	47.3	38.1	50.1	38.0	31.2	24.7	36.9	25.7	19.3	12.7	26.6	16.1	9.9	-	2.5	5.6	8.7
AST109-109-01-00-17-01	18.41	18.96	61.8	53.3	45.1	35.3	49.7	36.8	29.6	22.7	36.6	24.6	17.9	10.7	26.3	15.1	8.6	-	2.6	5.8	9.1
AST109-109-01-08-01-01	18.41	18.96	61.8	53.3	45.1	35.3	49.7	36.8	29.6	22.7	36.6	24.6	17.9	10.7	26.3	15.1	8.6	-	2.6	5.8	9.0
AST109-109-01-00-18-00	18.91	19.46	61.8	53.3	45.1	35.3	49.7	36.8	29.6	22.7	36.6	24.6	17.9	10.7	26.3	15.1	8.6	-	2.7	6.0	9.3
AST109-109-01-09-00-00	18.91	19.46	61.8	53.3	45.1	35.3	49.7	36.8	29.6	22.7	36.6	24.6	17.9	10.7	26.3	15.1	8.6	-	2.7	5.9	9.2

3.3. Locked AST109-157 tower

As a result of the numerical analyses carried out the values of the permissible load *Fv* acting on a single rack of the AST109-157 tower as well as the values of the minimum required load acting on a single rack Fv_{min} to prevent the base from slipping were determined. When the value of the permissible load *Fv* was lower than the value of the minimum required load of a single rack Fv_{min} to prevent slipping of the base the result was rejected and no interpolation was made. The results are summarized in Tab. 3.2. The "-" sign in Tab. 3.2 means the situation when $Fv < Fv_{min}$. In addition, an example of the graphical summary of the results in the form of graphs for different levels of wind load and different levels of the base protrusion Sc was presented (Fig. 3.3).

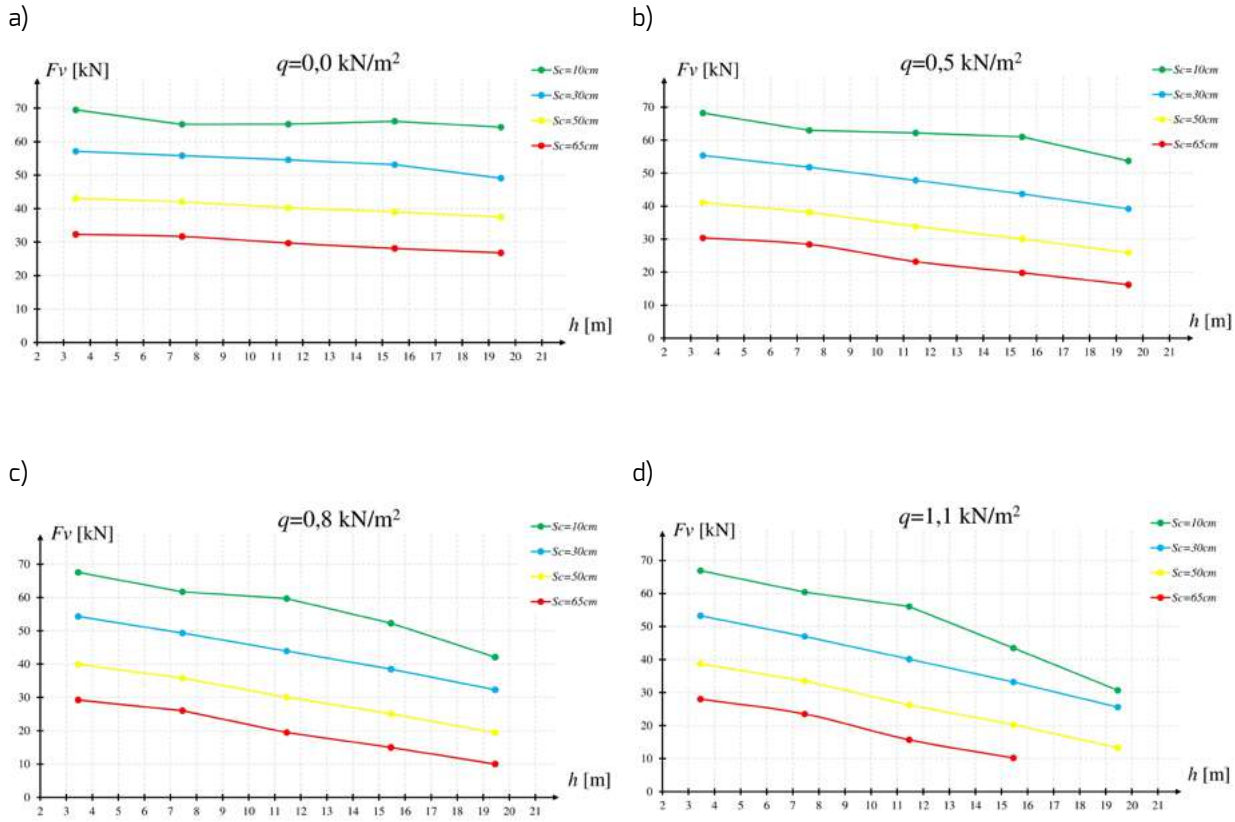

Fig. 3.3

Permissible load of a single rack of the AST109-157 tower with different wind load:
a) q=0,0 kN/m² / b) q=0,5 kN/m² / c) q=0,8 kN/m² / d) q=1,1 kN/m²

Tab. 3.2 Permissible characteristic (actually occurring on site) loads of locked AST109-157 towers

LOCKED TOWER			AST109-157																Minimum Required Load of a Single Rack to Prevent the Base from Slipping $F_{v_{min}}$ [kN]		
			Permissible load F_v per single tower rack [kN]																		
			$S_{integr.}$=10 cm (S_p=6cm; S_g=4 cm)				$S_{integr.}$=30 cm (S_p=18 cm; S_g=12 cm)				$S_{integr.}$=50 cm (S_p=30cm; S_g=20 cm)				$S_{integr.}$=65 cm (S_p=40cm; S_g=25 cm)						
Tower name	H_{min} [m]	H_{max} [m]	Wind pressure q [kN/m²]				Wind pressure q [kN/m²]				Wind pressure q [kN/m²]				Wind pressure q [kN/m²]				Wind pressure q [kN/m²]		
			0.0	0.5	0.8	1.1	0.0	0.5	0.8	1.1	0.0	0.5	0.8	1.1	0.0	0.5	0.8	1.1	0.5	0.8	1.1
AST109-157-01-00-00-01	1.41	1.96	69.5	68.2	67.6	66.9	57.1	55.4	54.3	53.3	43.1	41.1	39.9	38.7	32.3	30.4	29.2	28.0	0.2	0.6	1.0
AST109-157-01-00-01-00	1.91	2.46	69.5	68.2	67.6	66.9	57.1	55.4	54.3	53.3	43.1	41.1	39.9	38.7	32.3	30.4	29.2	28.0	0.2	0.7	1.1
AST109-157-01-00-01-01	2.41	2.96	69.5	68.2	67.6	66.9	57.1	55.4	54.3	53.3	43.1	41.1	39.9	38.7	32.3	30.4	29.2	28.0	0.3	0.9	1.4
AST109-157-01-00-02-00	2.91	3.46	69.5	68.2	67.6	66.9	57.1	55.4	54.3	53.3	43.1	41.1	39.9	38.7	32.3	30.4	29.2	28.0	0.4	1.0	1.6
AST109-157-01-01-00-00	2.91	3.46	69.5	68.2	67.6	66.9	57.1	55.4	54.3	53.3	43.1	41.1	39.9	38.7	32.3	30.4	29.2	28.0	0.4	1.0	1.6
AST109-157-01-00-02-01	3.41	3.96	68.4	66.9	66.1	65.3	56.8	54.5	53.1	51.7	42.8	40.4	38.9	37.4	32.2	29.9	28.4	26.9	0.4	1.1	1.8
AST109-157-01-01-00-01	3.41	3.96	68.4	66.9	66.1	65.3	56.8	54.5	53.1	51.7	42.8	40.4	38.9	37.4	32.2	29.9	28.4	26.9	0.5	1.2	1.9
AST109-157-01-00-03-00	3.91	4.46	68.4	66.9	66.1	65.3	56.8	54.5	53.1	51.7	42.8	40.4	38.9	37.4	32.2	29.9	28.4	26.9	0.5	1.2	2.0
AST109-157-01-01-01-00	3.91	4.46	68.4	66.9	66.1	65.3	56.8	54.5	53.1	51.7	42.8	40.4	38.9	37.4	32.2	29.9	28.4	26.9	0.5	1.3	2.1
AST109-157-01-00-03-01	4.41	4.96	67.3	65.6	64.6	63.7	56.5	53.6	51.8	50.1	42.6	39.6	37.9	36.1	32.0	29.4	27.6	25.8	0.5	1.4	2.3
AST109-157-01-01-01-01	4.41	4.96	67.3	65.6	64.6	63.7	56.5	53.6	51.8	50.1	42.6	39.6	37.9	36.1	32.0	29.4	27.6	25.8	0.6	1.5	2.3
AST109-157-01-00-04-00	4.91	5.46	67.3	65.6	64.6	63.7	56.5	53.6	51.8	50.1	42.6	39.6	37.9	36.1	32.0	29.4	27.6	25.8	0.6	1.5	2.5
AST109-157-01-02-00-00	4.91	5.46	67.3	65.6	64.6	63.7	56.5	53.6	51.8	50.1	42.6	39.6	37.9	36.1	32.0	29.4	27.6	25.8	0.7	1.6	2.5
AST109-157-01-00-04-01	5.41	5.96	66.2	64.3	63.2	62.0	56.2	52.7	50.6	48.6	42.3	38.9	36.8	34.8	31.8	28.9	26.8	24.6	0.7	1.7	2.7
AST109-157-01-02-00-01	5.41	5.96	66.2	64.3	63.2	62.0	56.2	52.7	50.6	48.6	42.3	38.9	36.8	34.8	31.8	28.9	26.8	24.6	0.7	1.8	2.8
AST109-157-01-00-05-00	5.91	6.46	66.2	64.3	63.2	62.0	56.2	52.7	50.6	48.6	42.3	38.9	36.8	34.8	31.8	28.9	26.8	24.6	0.7	1.8	2.9
AST109-157-01-02-01-00	5.91	6.46	66.2	64.3	63.2	62.0	56.2	52.7	50.6	48.6	42.3	38.9	36.8	34.8	31.8	28.9	26.8	24.6	0.8	1.9	3.0
AST109-157-01-00-05-01	6.41	6.96	65.2	63.0	61.7	60.4	55.8	51.8	49.3	47.0	42.0	38.1	35.8	33.5	31.7	28.4	26.0	23.5	0.8	2.0	3.2
AST109-157-01-02-01-01	6.41	6.96	65.2	63.0	61.7	60.4	55.8	51.8	49.3	47.0	42.0	38.1	35.8	33.5	31.7	28.4	26.0	23.5	0.8	2.1	3.3
AST109-157-01-00-06-00	6.91	7.46	65.2	63.0	61.7	60.4	55.8	51.8	49.3	47.0	42.0	38.1	35.8	33.5	31.7	28.4	26.0	23.5	0.9	2.1	3.4
AST109-157-01-03-00-00	6.91	7.46	65.2	63.0	61.7	60.4	55.8	51.8	49.3	47.0	42.0	38.1	35.8	33.5	31.7	28.4	26.0	23.5	0.9	2.2	3.5
AST109-157-01-00-06-01	7.41	7.96	65.2	62.8	61.2	59.3	55.5	50.8	48.0	45.3	41.6	37.1	34.4	31.7	31.2	27.1	24.4	21.6	0.9	2.3	3.6
AST109-157-01-03-00-01	7.41	7.96	65.2	62.8	61.2	59.3	55.5	50.8	48.0	45.3	41.6	37.1	34.4	31.7	31.2	27.1	24.4	21.6	1.0	2.4	3.8
AST109-157-01-00-07-00	7.91	8.46	65.2	62.8	61.2	59.3	55.5	50.8	48.0	45.3	41.6	37.1	34.4	31.7	31.2	27.1	24.4	21.6	1.0	2.4	3.9
AST109-157-01-03-01-00	7.91	8.46	65.2	62.8	61.2	59.3	55.5	50.8	48.0	45.3	41.6	37.1	34.4	31.7	31.2	27.1	24.4	21.6	1.0	2.5	3.9
AST109-157-01-00-07-01	8.41	8.96	65.2	62.6	60.7	58.2	55.2	49.8	46.6	43.6	41.1	36.0	32.9	29.9	30.7	25.8	22.7	19.6	1.1	2.6	4.1
AST109-157-01-03-01-01	8.41	8.96	65.2	62.6	60.7	58.2	55.2	49.8	46.6	43.6	41.1	36.0	32.9	29.9	30.7	25.8	22.7	19.6	1.1	2.6	4.2
AST109-157-01-00-08-00	8.91	9.46	65.2	62.6	60.7	58.2	55.2	49.8	46.6	43.6	41.1	36.0	32.9	29.9	30.7	25.8	22.7	19.6	1.1	2.8	4.4
AST109-157-01-04-00-00	8.91	9.46	65.2	62.6	60.7	58.2	55.2	49.8	46.6	43.6	41.1	36.0	32.9	29.9	30.7	25.8	22.7	19.6	1.2	2.8	4.4
AST109-157-01-00-08-01	9.41	9.96	65.2	62.4	60.2	57.2	54.9	48.8	45.3	41.8	40.7	34.9	31.5	28.1	30.2	24.5	21.1	17.7	1.2	2.9	4.6
AST109-157-01-04-00-01	9.41	9.96	65.2	62.4	60.2	57.2	54.9	48.8	45.3	41.8	40.7	34.9	31.5	28.1	30.2	24.5	21.1	17.7	1.2	3.0	4.7
AST109-157-01-00-09-00	9.91	10.46	65.2	62.4	60.2	57.2	54.9	48.8	45.3	41.8	40.7	34.9	31.5	28.1	30.2	24.5	21.1	17.7	1.3	3.1	4.8

Tab. 3.2 cont.

LOCKED TOWER			AST109-157																Minimum Required Load of a Single Rack to Prevent the Base from Slipping $F_{v_{min}}$ [kN]		
			Permissible load F_v per single tower rack [kN]																		
			$S_{integr.}$=10 cm (S_p=6 cm; S_g=4 cm)				$S_{integr.}$=30 cm (S_p=18 cm; S_g=12 cm)				$S_{integr.}$=50 cm (S_p=30 cm; S_g=20 cm)				$S_{integr.}$=65 cm (S_p=40 cm; S_g=25 cm)						
Tower name	H_{min} [m]	H_{max} [m]	Wind pressure q [kN/m²]				Wind pressure q [kN/m²]				Wind pressure q [kN/m²]				Wind pressure q [kN/m²]				Wind pressure q [kN/m²]		
AST109-157-01-04-01-00	9.91	10.46	65.2	62.4	60.2	57.2	54.9	48.8	45.3	41.8	40.7	34.9	31.5	28.1	30.2	24.5	21.1	17.7	1.3	3.1	4.8
AST109-157-01-00-09-01	10.41	10.96	65.2	62.2	59.7	56.1	54.6	47.8	43.9	40.1	40.2	33.8	30.1	26.2	29.7	23.2	19.5	15.7	1.3	3.2	5.1
AST109-157-01-04-01-01	10.41	10.96	65.2	62.2	59.7	56.1	54.6	47.8	43.9	40.1	40.2	33.8	30.1	26.2	29.7	23.2	19.5	15.7	1.4	3.2	5.1
AST109-157-01-00-10-00	10.91	11.46	65.2	62.2	59.7	56.1	54.6	47.8	43.9	40.1	40.2	33.8	30.1	26.2	29.7	23.2	19.5	15.7	1.4	3.4	5.3
AST109-157-01-05-00-00	10.91	11.46	65.2	62.2	59.7	56.1	54.6	47.8	43.9	40.1	40.2	33.8	30.1	26.2	29.7	23.2	19.5	15.7	1.4	3.4	5.3
AST109-157-01-00-10-01	11.41	11.96	65.4	61.9	57.9	52.9	54.2	46.8	42.6	38.4	39.9	32.9	28.8	24.8	29.3	22.4	18.3	14.3	1.5	3.5	5.6
AST109-157-01-05-00-01	11.41	11.96	65.4	61.9	57.9	52.9	54.2	46.8	42.6	38.4	39.9	32.9	28.8	24.8	29.3	22.4	18.3	14.3	1.5	3.6	5.6
AST109-157-01-00-11-00	11.91	12.46	65.4	61.9	57.9	52.9	54.2	46.8	42.6	38.4	39.9	32.9	28.8	24.8	29.3	22.4	18.3	14.3	1.5	3.7	5.8
AST109-157-01-05-01-00	11.91	12.46	65.4	61.9	57.9	52.9	54.2	46.8	42.6	38.4	39.9	32.9	28.8	24.8	29.3	22.4	18.3	14.3	1.6	3.7	5.8
AST109-157-01-00-11-01	12.41	12.96	65.7	61.6	56.0	49.8	53.8	45.8	41.2	36.7	39.6	32.0	27.6	23.3	28.9	21.5	17.2	13.0	1.6	3.8	6.0
AST109-157-01-05-01-01	12.41	12.96	65.7	61.6	56.0	49.8	53.8	45.8	41.2	36.7	39.6	32.0	27.6	23.3	28.9	21.5	17.2	13.0	1.6	3.8	6.1
AST109-157-01-00-12-00	12.91	13.46	65.7	61.6	56.0	49.8	53.8	45.8	41.2	36.7	39.6	32.0	27.6	23.3	28.9	21.5	17.2	13.0	1.7	4.0	6.3
AST109-157-01-06-00-00	12.91	13.46	65.7	61.6	56.0	49.8	53.8	45.8	41.2	36.7	39.6	32.0	27.6	23.3	28.9	21.5	17.2	13.0	1.7	4.0	6.3
AST109-157-01-00-12-01	13.41	13.96	65.9	61.3	54.2	46.6	53.5	44.7	39.9	34.9	39.3	31.0	26.3	21.8	28.5	20.7	16.1	11.6	1.7	4.1	6.5
AST109-157-01-06-00-01	13.41	13.96	65.9	61.3	54.2	46.6	53.5	44.7	39.9	34.9	39.3	31.0	26.3	21.8	28.5	20.7	16.1	11.6	1.8	4.2	6.5
AST109-157-01-00-13-00	13.91	14.46	65.9	61.3	54.2	46.6	53.5	44.7	39.9	34.9	39.3	31.0	26.3	21.8	28.5	20.7	16.1	11.6	1.8	4.3	6.8
AST109-157-01-06-01-00	13.91	14.46	65.9	61.3	54.2	46.6	53.5	44.7	39.9	34.9	39.3	31.0	26.3	21.8	28.5	20.7	16.1	11.6	1.8	4.3	6.7
AST109-157-01-00-13-01	14.41	14.96	66.1	61.0	52.3	43.5	53.1	43.7	38.5	33.2	39.0	30.1	25.1	20.3	28.1	19.8	15.0	10.2	1.9	4.4	7.0
AST109-157-01-06-01-01	14.41	14.96	66.1	61.0	52.3	43.5	53.1	43.7	38.5	33.2	39.0	30.1	25.1	20.3	28.1	19.8	15.0	10.2	1.9	4.4	7.0
AST109-157-01-00-14-00	14.91	15.46	66.1	61.0	52.3	43.5	53.1	43.7	38.5	33.2	39.0	30.1	25.1	20.3	28.1	19.8	15.0	10.2	2.0	4.6	7.2
AST109-157-01-07-00-00	14.91	15.46	66.1	61.0	52.3	43.5	53.1	43.7	38.5	33.2	39.0	30.1	25.1	20.3	28.1	19.8	15.0	10.2	2.0	4.6	7.2
AST109-157-01-00-14-01	15.41	15.96	65.7	59.2	49.8	40.3	52.1	42.6	37.0	31.3	38.6	29.1	23.7	18.6	27.8	18.9	13.8	-	2.0	4.7	7.5
AST109-157-01-07-00-01	15.41	15.96	65.7	59.2	49.8	40.3	52.1	42.6	37.0	31.3	38.6	29.1	23.7	18.6	27.8	18.9	13.8	-	2.0	4.8	7.5
AST109-157-01-00-15-00	15.91	16.46	65.7	59.2	49.8	40.3	52.1	42.6	37.0	31.3	38.6	29.1	23.7	18.6	27.8	18.9	13.8	-	2.1	4.9	7.7
AST109-157-01-07-01-00	15.91	16.46	65.7	59.2	49.8	40.3	52.1	42.6	37.0	31.3	38.6	29.1	23.7	18.6	27.8	18.9	13.8	-	2.1	4.9	7.6
AST109-157-01-00-15-01	16.41	16.96	65.2	57.4	47.2	37.1	51.1	41.5	35.4	29.4	38.3	28.0	22.3	16.8	27.5	18.0	12.5	-	2.1	5.0	7.9
AST109-157-01-07-01-01	16.41	16.96	65.2	57.4	47.2	37.1	51.1	41.5	35.4	29.4	38.3	28.0	22.3	16.8	27.5	18.0	12.5	-	2.2	5.0	7.9
AST109-157-01-00-16-00	16.91	17.46	65.2	57.4	47.2	37.1	51.1	41.5	35.4	29.4	38.3	28.0	22.3	16.8	27.5	18.0	12.5	-	2.2	5.2	8.2
AST109-157-01-08-00-00	16.91	17.46	65.2	57.4	47.2	37.1	51.1	41.5	35.4	29.4	38.3	28.0	22.3	16.8	27.5	18.0	12.5	-	2.2	5.2	8.1
AST109-157-01-00-16-01	17.41	17.96	64.8	55.5	44.7	33.9	50.1	40.3	33.9	27.5	37.9	27.0	20.8	15.1	27.1	17.1	11.3	-	2.3	5.3	8.4
AST109-157-01-08-00-01	17.41	17.96	64.8	55.5	44.7	33.9	50.1	40.3	33.9	27.5	37.9	27.0	20.8	15.1	27.1	17.1	11.3	-	2.3	5.4	8.4
AST109-157-01-00-17-00	17.91	18.46	64.8	55.5	44.7	33.9	50.1	40.3	33.9	27.5	37.9	27.0	20.8	15.1	27.1	17.1	11.3	-	2.4	5.5	8.7
AST109-157-01-08-01-00	17.91	18.46	64.8	55.5	44.7	33.9	50.1	40.3	33.9	27.5	37.9	27.0	20.8	15.1	27.1	17.1	11.3	-	2.4	5.5	8.6
AST109-157-01-00-17-01	18.41	18.96	64.3	53.7	42.1	30.7	49.1	39.2	32.3	25.6	37.5	25.9	19.4	13.3	26.8	16.2	10.0	-	2.4	5.7	8.9
AST109-157-01-08-01-01	18.41	18.96	64.3	53.7	42.1	30.7	49.1	39.2	32.3	25.6	37.5	25.9	19.4	13.3	26.8	16.2	10.0	-	2.4	5.6	8.8
AST109-157-01-00-18-00	18.91	19.46	64.3	53.7	42.1	30.7	49.1	39.2	32.3	25.6	37.5	25.9	19.4	13.3	26.8	16.2	10.0	-	2.5	5.8	9.1
AST109-157-01-09-00-00	18.91	19.46	64.3	53.7	42.1	30.7	49.1	39.2	32.3	25.6	37.5	25.9	19.4	13.3	26.8	16.2	10.0	-	2.5	5.8	9.1

3.4 Locked AST109-207 Tower

As a result of the numerical analyses carried out the values of the permissible load *Fv* acting on a single rack of the AST109-207 tower as well as the values of the minimum required load acting on a single rack *Fv min* to prevent the base from slipping were determined. When the value of the permissible load *Fv* was lower than the value of the minimum required load of a single rack *Fv min* to prevent slipping of the base the result was rejected and no interpolation was made. The results are summarized in Tab. 3.3. In addition, an example of the graphical summary of the results in the form of graphs for different levels of wind load and different levels of the base protrusion Sc was presented (Fig. 3.4).

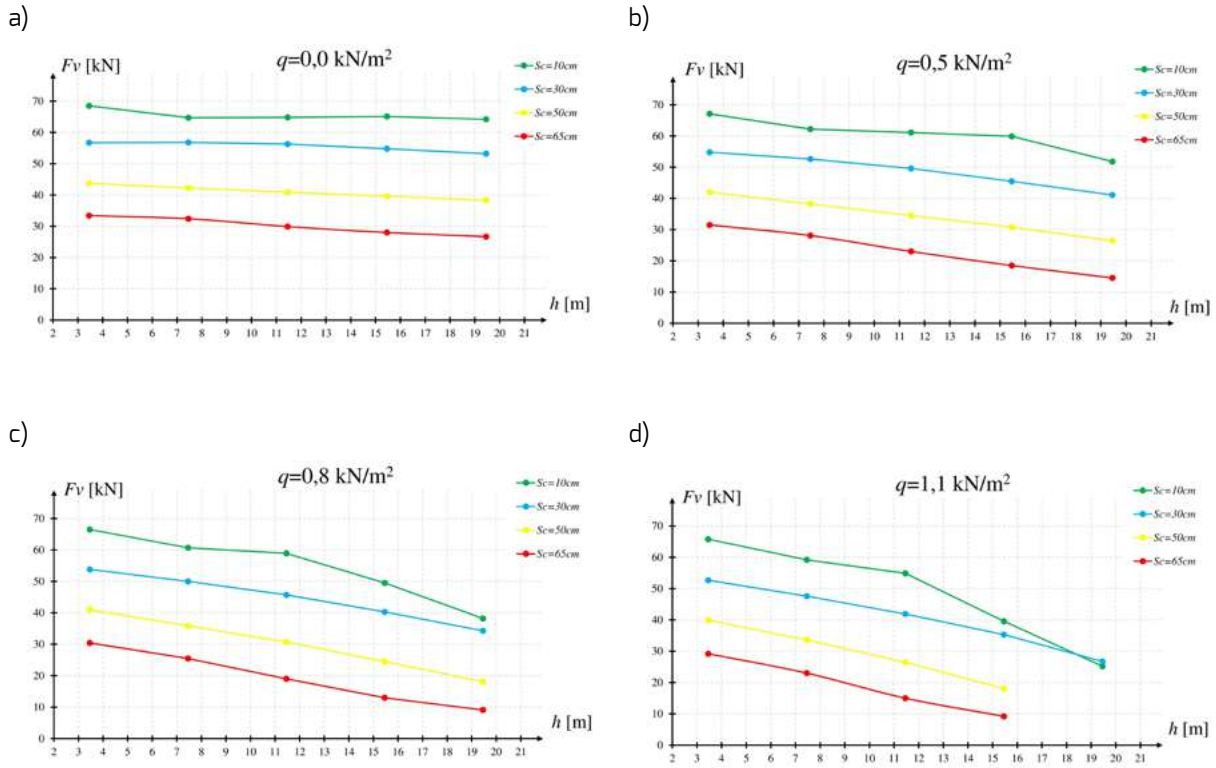

Fig. 3.4

Permissible load of a single rack of the AST109-207 tower with different wind load:

a) q=0,0 kN/m² / b) q=0,5 kN/m² / c) q=0,8 kN/m² / d) q=1,1 kN/m²

Tab. 3.3 Permissible characteristic (actually occurring on site) loads of locked AST109-207 towers

LOCKED TOWER			AST109-207																Minimum Required Load of a Single Rack to Prevent the Base from Slipping F_{vmin} [kN]		
			Permissible load F_v per single tower rack [kN]																		
			$S_{integr.}$=10 cm (S_p=6cm; S_g=4 cm)				$S_{integr.}$=30 cm (S_p=18 cm; S_g=12 cm)				$S_{integr.}$=50 cm (S_p=30cm; S_g=20 cm)				$S_{integr.}$=65 cm (S_p=40cm; S_g=25 cm)						
Tower name	Hmin [m]	Hmax [m]	Wind pressure q [kN/m²]				Wind pressure q [kN/m²]				Wind pressure q [kN/m²]				Wind pressure q [kN/m²]				Wind pressure q [kN/m²]		
			0.0	0.5	0.8	1.1	0.0	0.5	0.8	1.1	0.0	0.5	0.8	1.1	0.0	0.5	0.8	1.1	0.5	0.8	1.1
AST109-207-01-00-00-01	1.41	1.96	68.5	67.1	66.5	65.8	56.7	54.8	53.8	52.7	43.7	42.0	41.0	39.9	33.4	31.5	30.4	29.2	0.3	0.7	1.2
AST109-207-01-00-01-00	1.91	2.46	68.5	67.1	66.5	65.8	56.7	54.8	53.8	52.7	43.7	42.0	41.0	39.9	33.4	31.5	30.4	29.2	0.3	0.8	1.3
AST109-207-01-00-01-01	2.41	2.96	68.5	67.1	66.5	65.8	56.7	54.8	53.8	52.7	43.7	42.0	41.0	39.9	33.4	31.5	30.4	29.2	0.4	1.0	1.7
AST109-207-01-00-02-00	2.91	3.46	68.5	67.1	66.5	65.8	56.7	54.8	53.8	52.7	43.7	42.0	41.0	39.9	33.4	31.5	30.4	29.2	0.5	1.2	1.8
AST109-207-01-01-00-00	2.91	3.46	68.5	67.1	66.5	65.8	56.7	54.8	53.8	52.7	43.7	42.0	41.0	39.9	33.4	31.5	30.4	29.2	0.5	1.2	1.9
AST109-207-01-00-02-01	3.41	3.96	67.6	65.9	65.1	64.2	56.7	54.3	52.9	51.4	43.3	41.1	39.7	38.3	33.2	30.7	29.2	27.7	0.5	1.4	2.2
AST109-207-01-01-00-01	3.41	3.96	67.6	65.9	65.1	64.2	56.7	54.3	52.9	51.4	43.3	41.1	39.7	38.3	33.2	30.7	29.2	27.7	0.6	1.4	2.3
AST109-207-01-00-03-00	3.91	4.46	67.6	65.9	65.1	64.2	56.7	54.3	52.9	51.4	43.3	41.1	39.7	38.3	33.2	30.7	29.2	27.7	0.6	1.5	2.4
AST109-207-01-01-01-00	3.91	4.46	67.6	65.9	65.1	64.2	56.7	54.3	52.9	51.4	43.3	41.1	39.7	38.3	33.2	30.7	29.2	27.7	0.6	1.5	2.4
AST109-207-01-00-03-01	4.41	4.96	66.6	64.7	63.6	62.5	56.8	53.7	51.9	50.2	43.0	40.1	38.5	36.8	32.9	29.8	28.0	26.1	0.7	1.7	2.7
AST109-207-01-01-01-01	4.41	4.96	66.6	64.7	63.6	62.5	56.8	53.7	51.9	50.2	43.0	40.1	38.5	36.8	32.9	29.8	28.0	26.1	0.7	1.7	2.8
AST109-207-01-00-04-00	4.91	5.46	66.6	64.7	63.6	62.5	56.8	53.7	51.9	50.2	43.0	40.1	38.5	36.8	32.9	29.8	28.0	26.1	0.7	1.8	2.9
AST109-207-01-02-00-00	4.91	5.46	66.6	64.7	63.6	62.5	56.8	53.7	51.9	50.2	43.0	40.1	38.5	36.8	32.9	29.8	28.0	26.1	0.8	1.9	3.0
AST109-207-01-00-04-01	5.41	5.96	65.7	63.4	62.2	60.9	56.8	53.2	51.0	48.9	42.6	39.2	37.2	35.2	32.7	29.0	26.7	24.6	0.8	2.0	3.2
AST109-207-01-02-00-01	5.41	5.96	65.7	63.4	62.2	60.9	56.8	53.2	51.0	48.9	42.6	39.2	37.2	35.2	32.7	29.0	26.7	24.6	0.9	2.1	3.3
AST109-207-01-00-05-00	5.91	6.46	65.7	63.4	62.2	60.9	56.8	53.2	51.0	48.9	42.6	39.2	37.2	35.2	32.7	29.0	26.7	24.6	0.9	2.1	3.4
AST109-207-01-02-01-00	5.91	6.46	65.7	63.4	62.2	60.9	56.8	53.2	51.0	48.9	42.6	39.2	37.2	35.2	32.7	29.0	26.7	24.6	0.9	2.2	3.5
AST109-207-01-00-05-01	6.41	6.96	64.7	62.2	60.7	59.2	56.8	52.6	50.0	47.6	42.2	38.2	35.9	33.6	32.4	28.1	25.5	23.0	1.0	2.3	3.7
AST109-207-01-02-01-01	6.41	6.96	64.7	62.2	60.7	59.2	56.8	52.6	50.0	47.6	42.2	38.2	35.9	33.6	32.4	28.1	25.5	23.0	1.0	2.4	3.8
AST109-207-01-00-06-00	6.91	7.46	64.7	62.2	60.7	59.2	56.8	52.6	50.0	47.6	42.2	38.2	35.9	33.6	32.4	28.1	25.5	23.0	1.0	2.4	3.9
AST109-207-01-03-00-00	6.91	7.46	64.7	62.2	60.7	59.2	56.8	52.6	50.0	47.6	42.2	38.2	35.9	33.6	32.4	28.1	25.5	23.0	1.1	2.6	4.0
AST109-207-01-00-06-01	7.41	7.96	64.7	61.9	60.3	58.1	56.7	51.9	48.9	46.2	41.9	37.3	34.6	31.8	31.8	26.8	23.9	21.0	1.1	2.7	4.2
AST109-207-01-03-00-01	7.41	7.96	64.7	61.9	60.3	58.1	56.7	51.9	48.9	46.2	41.9	37.3	34.6	31.8	31.8	26.8	23.9	21.0	1.2	2.8	4.4
AST109-207-01-00-07-00	7.91	8.46	64.7	61.9	60.3	58.1	56.7	51.9	48.9	46.2	41.9	37.3	34.6	31.8	31.8	26.8	23.9	21.0	1.2	2.8	4.4
AST109-207-01-03-01-00	7.91	8.46	64.7	61.9	60.3	58.1	56.7	51.9	48.9	46.2	41.9	37.3	34.6	31.8	31.8	26.8	23.9	21.0	1.3	2.9	4.5
AST109-207-01-00-07-01	8.41	8.96	64.8	61.7	59.8	57.1	56.6	51.1	47.9	44.8	41.6	36.4	33.3	30.1	31.2	25.6	22.3	19.0	1.3	3.0	4.7
AST109-207-01-03-01-01	8.41	8.96	64.8	61.7	59.8	57.1	56.6	51.1	47.9	44.8	41.6	36.4	33.3	30.1	31.2	25.6	22.3	19.0	1.4	3.1	4.9
AST109-207-01-00-08-00	8.91	9.46	64.8	61.7	59.8	57.1	56.6	51.1	47.9	44.8	41.6	36.4	33.3	30.1	31.2	25.6	22.3	19.0	1.3	3.1	4.9
AST109-207-01-04-00-00	8.91	9.46	64.8	61.7	59.8	57.1	56.6	51.1	47.9	44.8	41.6	36.4	33.3	30.1	31.2	25.6	22.3	19.0	1.4	3.3	5.1

Tab. 3.3 cont.

LOCKED TOWER			AST109-207																Minimum Required Load of a Single Rack to Prevent the Base from Slipping $F_{v_{min}}$ (kN)		
			Permissible load F_v per single tower rack (kN)																		
			$S_{integr.}$=10 cm (S_p=6 cm; S_g=4 cm)				$S_{integr.}$=30 cm (S_p=18 cm; S_g=12 cm)				$S_{integr.}$=50 cm (S_p=30 cm; S_g=20 cm)				$S_{integr.}$=65 cm (S_p=40 cm; S_g=25 cm)						
Tower name	H_{min} (m)	H_{max} (m)	Wind pressure q (kN/m²)				Wind pressure q (kN/m²)				Wind pressure q (kN/m²)				Wind pressure q (kN/m²)				Wind pressure q (kN/m²)		
AST109-207-01-00-08-01	9.41	9.96	64.8	61.4	59.4	56.0	56.4	50.4	46.8	43.3	41.2	35.4	32.0	28.3	30.5	24.3	20.6	17.0	1.4	3.3	5.2
AST109-207-01-04-00-01	9.41	9.96	64.8	61.4	59.4	56.0	56.4	50.4	46.8	43.3	41.2	35.4	32.0	28.3	30.5	24.3	20.6	17.0	1.5	3.5	5.5
AST109-207-01-00-09-00	9.91	10.46	64.8	61.4	59.4	56.0	56.4	50.4	46.8	43.3	41.2	35.4	32.0	28.3	30.5	24.3	20.6	17.0	1.5	3.4	5.4
AST109-207-01-04-01-00	9.91	10.46	64.8	61.4	59.4	56.0	56.4	50.4	46.8	43.3	41.2	35.4	32.0	28.3	30.5	24.3	20.6	17.0	1.6	3.6	5.6
AST109-207-01-00-09-01	10.41	10.96	64.8	61.1	58.9	54.9	56.3	49.6	45.7	41.9	40.9	34.5	30.7	26.5	29.9	23.0	19.0	15.0	1.5	3.6	5.7
AST109-207-01-04-01-01	10.41	10.96	64.8	61.1	58.9	54.9	56.3	49.6	45.7	41.9	40.9	34.5	30.7	26.5	29.9	23.0	19.0	15.0	1.7	3.8	6.0
AST109-207-01-00-10-00	10.91	11.46	64.8	61.1	58.9	54.9	56.3	49.6	45.7	41.9	40.9	34.5	30.7	26.5	29.9	23.0	19.0	15.0	1.6	3.7	5.9
AST109-207-01-05-00-00	10.91	11.46	64.8	61.1	58.9	54.9	56.3	49.6	45.7	41.9	40.9	34.5	30.7	26.5	29.9	23.0	19.0	15.0	1.7	4.0	6.2
AST109-207-01-00-10-01	11.41	11.96	64.9	60.8	56.6	51.1	55.9	48.6	44.4	40.3	40.6	33.6	29.2	24.4	29.4	21.9	17.5	13.6	1.7	4.0	6.3
AST109-207-01-05-00-01	11.41	11.96	64.9	60.8	56.6	51.1	55.9	48.6	44.4	40.3	40.6	33.6	29.2	24.4	29.4	21.9	17.5	13.6	1.8	4.2	6.5
AST109-207-01-00-11-00	11.91	12.46	64.9	60.8	56.6	51.1	55.9	48.6	44.4	40.3	40.6	33.6	29.2	24.4	29.4	21.9	17.5	13.6	1.7	4.1	6.4
AST109-207-01-05-01-00	11.91	12.46	64.9	60.8	56.6	51.1	55.9	48.6	44.4	40.3	40.6	33.6	29.2	24.4	29.4	21.9	17.5	13.6	1.9	4.3	6.7
AST109-207-01-00-11-01	12.41	12.96	65.0	60.5	54.2	47.3	55.6	47.6	43.0	38.6	40.3	32.7	27.6	22.3	29.0	20.8	16.0	12.1	1.8	4.3	6.8
AST109-207-01-05-01-01	12.41	12.96	65.0	60.5	54.2	47.3	55.6	47.6	43.0	38.6	40.3	32.7	27.6	22.3	29.0	20.8	16.0	12.1	2.0	4.5	7.0
AST109-207-01-00-12-00	12.91	13.46	65.0	60.5	54.2	47.3	55.6	47.6	43.0	38.6	40.3	32.7	27.6	22.3	29.0	20.8	16.0	12.1	1.9	4.4	6.9
AST109-207-01-06-00-00	12.91	13.46	65.0	60.5	54.2	47.3	55.6	47.6	43.0	38.6	40.3	32.7	27.6	22.3	29.0	20.8	16.0	12.1	2.1	4.7	7.2
AST109-207-01-00-12-01	13.41	13.96	65.0	60.2	51.9	43.4	55.2	46.5	41.7	37.0	39.9	31.7	26.1	20.2	28.5	19.6	14.5	10.7	2.0	4.6	7.3
AST109-207-01-06-00-01	13.41	13.96	65.0	60.2	51.9	43.4	55.2	46.5	41.7	37.0	39.9	31.7	26.1	20.2	28.5	19.6	14.5	10.7	2.2	4.9	7.6
AST109-207-01-00-13-00	13.91	14.46	65.0	60.2	51.9	43.4	55.2	46.5	41.7	37.0	39.9	31.7	26.1	20.2	28.5	19.6	14.5	10.7	2.0	4.7	7.4
AST109-207-01-06-01-00	13.91	14.46	65.0	60.2	51.9	43.4	55.2	46.5	41.7	37.0	39.9	31.7	26.1	20.2	28.5	19.6	14.5	10.7	2.2	5.0	7.7
AST109-207-01-00-13-01	14.41	14.96	65.1	59.9	49.5	39.6	54.8	45.5	40.3	35.3	39.6	30.8	24.5	18.1	28.0	18.5	13.0	9.2	2.1	4.9	7.8
AST109-207-01-06-01-01	14.41	14.96	65.1	59.9	49.5	39.6	54.8	45.5	40.3	35.3	39.6	30.8	24.5	18.1	28.0	18.5	13.0	9.2	2.3	5.2	8.1
AST109-207-01-00-14-00	14.91	15.46	65.1	59.9	49.5	39.6	54.8	45.5	40.3	35.3	39.6	30.8	24.5	18.1	28.0	18.5	13.0	9.2	2.2	5.0	7.9
AST109-207-01-07-00-00	14.91	15.46	65.1	59.9	49.5	39.6	54.8	45.5	40.3	35.3	39.6	30.8	24.5	18.1	28.0	18.5	13.0	9.2	2.4	5.3	8.3
AST109-207-01-00-14-01	15.41	15.96	64.9	57.9	46.7	36.0	54.4	44.4	38.8	33.2	39.3	29.7	22.9	-	27.7	17.5	12.0	-	2.3	5.3	8.3
AST109-207-01-07-00-01	15.41	15.96	64.9	57.9	46.7	36.0	54.4	44.4	38.8	33.2	39.3	29.7	22.9	-	27.7	17.5	12.0	-	2.5	5.6	8.7
AST109-207-01-00-15-00	15.91	16.46	64.9	57.9	46.7	36.0	54.4	44.4	38.8	33.2	39.3	29.7	22.9	-	27.7	17.5	12.0	-	2.3	5.4	8.4
AST109-207-01-07-01-00	15.91	16.46	64.9	57.9	46.7	36.0	54.4	44.4	38.8	33.2	39.3	29.7	22.9	-	27.7	17.5	12.0	-	2.5	5.7	8.8
AST109-207-01-00-15-01	16.41	16.96	64.7	55.9	43.9	32.4	54.0	43.3	37.3	31.0	39.0	28.6	21.3	-	27.4	16.5	11.1	-	2.4	5.6	8.8
AST109-207-01-07-01-01	16.41	16.96	64.7	55.9	43.9	32.4	54.0	43.3	37.3	31.0	39.0	28.6	21.3	-	27.4	16.5	11.1	-	2.6	5.9	9.2
AST109-207-01-00-16-00	16.91	17.46	64.7	55.9	43.9	32.4	54.0	43.3	37.3	31.0	39.0	28.6	21.3	-	27.4	16.5	11.1	-	2.4	5.7	8.9
AST109-207-01-08-00-00	16.91	17.46	64.7	55.9	43.9	32.4	54.0	43.3	37.3	31.0	39.0	28.6	21.3	-	27.4	16.5	11.1	-	2.7	6.0	9.4
AST109-207-01-00-16-01	17.41	17.96	64.4	53.8	41.0	28.8	53.6	42.2	35.8	28.9	38.6	27.5	19.7	-	27.0	15.5	10.1	-	2.5	5.9	9.3
AST109-207-01-08-00-01	17.41	17.96	64.4	53.8	41.0	28.8	53.6	42.2	35.8	28.9	38.6	27.5	19.7	-	27.0	15.5	10.1	-	2.8	6.3	9.7
AST109-207-01-00-17-00	17.91	18.46	64.4	53.8	41.0	28.8	53.6	42.2	35.8	28.9	38.6	27.5	19.7	-	27.0	15.5	10.1	-	2.6	6.0	9.4
AST109-207-01-08-01-00	17.91	18.46	64.4	53.8	41.0	28.8	53.6	42.2	35.8	28.9	38.6	27.5	19.7	-	27.0	15.5	10.1	-	2.8	6.4	9.9
AST109-207-01-00-17-01	18.41	18.96	64.2	51.8	38.2	25.2	53.2	41.1	34.3	26.7	38.3	26.4	18.1	-	26.7	14.5	9.1	-	2.7	6.2	9.8
AST109-207-01-08-01-01	18.41	18.96	64.2	51.8	38.2	25.2	53.2	41.1	34.3	26.7	38.3	26.4	18.1	-	26.7	14.5	9.1	-	2.9	6.6	10.2
AST109-207-01-00-18-00	18.91	19.46	64.2	51.8	38.2	25.2	53.2	41.1	34.3	26.7	38.3	26.4	18.1	-	26.7	14.5	9.1	-	2.7	6.3	10.0
AST109-207-01-09-00-00	18.91	19.46	64.2	51.8	38.2	25.2	53.2	41.1	34.3	26.7	38.3	26.4	18.1	-	26.7	14.5	9.1	-	3.0	6.7	10.4

3.5. Locked AST109-257 Tower

As a result of the numerical analyses carried out the values of the permissible load *Fv* acting on a single rack of the AST109-257 tower as well as the values of the minimum required load acting on a single rack *Fv min* to prevent the base from slipping were determined. When the value of the permissible load *Fv* was lower than the value of the minimum required load of a single rack *Fv min* to prevent slipping of the base the result was rejected and no interpolation was made. The results are summarized in Tab. 3.4. In addition, an example of the graphical summary of the results in the form of graphs for different levels of wind load and different levels of the base protrusion Sc was presented (Fig. 3.5).

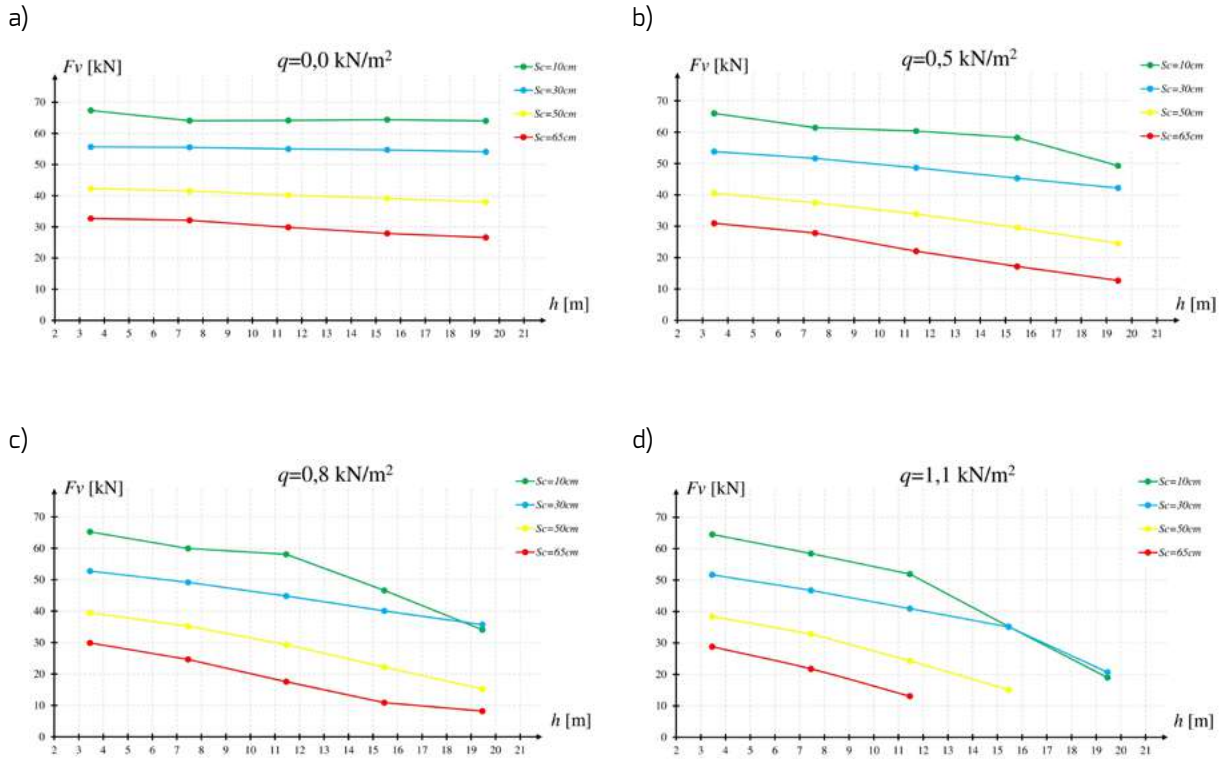

Fig. 3.5

Permissible load of a single rack of the AST109-257 tower with different wind load:

a) q=0,0 kN/m² / b) q=0,5 kN/m² / c) q=0,8 kN/m² / d) q=1,1 kN/m²

Tab. 3.4 Permissible characteristic (actually occurring on site) loads of locked AST109-257 towers

LOCKED TOWER			AST109-257																Minimum Required Load of a Single Rack to Prevent the Base from Slipping Fv_{min} [kN]		
			Permissible load Fv per single tower rack [kN]																		
			$S_{integr.}$=10 cm (S_p=6cm; S_g=4 cm)				$S_{integr.}$=30 cm (S_p=18 cm; S_g=12 cm)				$S_{integr.}$=50 cm (S_p=30cm; S_g=20 cm)				$S_{integr.}$=65 cm (S_p=40cm; S_g=25 cm)						
Tower name	Hmin [m]	Hmax [m]	Wind pressure q [kN/m²]				Wind pressure q [kN/m²]				Wind pressure q [kN/m²]				Wind pressure q [kN/m²]				Wind pressure q [kN/m²]		
			0.0	0.5	0.8	1.1	0.0	0.5	0.8	1.1	0.0	0.5	0.8	1.1	0.0	0.5	0.8	1.1	0.5	0.8	1.1
AST109-257-01-00-00-01	1.41	1.96	67.4	66.0	65.3	64.6	55.7	53.8	52.8	51.7	42.3	40.6	39.5	38.4	32.7	31.0	29.9	28.8	0.3	0.9	1.4
AST109-257-01-00-01-00	1.91	2.46	67.4	66.0	65.3	64.6	55.7	53.8	52.8	51.7	42.3	40.6	39.5	38.4	32.7	31.0	29.9	28.8	0.4	1.0	1.5
AST109-257-01-00-01-01	2.41	2.96	67.4	66.0	65.3	64.6	55.7	53.8	52.8	51.7	42.3	40.6	39.5	38.4	32.7	31.0	29.9	28.8	0.5	1.2	2.0
AST109-257-01-00-02-00	2.91	3.46	67.4	66.0	65.3	64.6	55.7	53.8	52.8	51.7	42.3	40.6	39.5	38.4	32.7	31.0	29.9	28.8	0.6	1.3	2.1
AST109-257-01-01-00-00	2.91	3.46	67.4	66.0	65.3	64.6	55.7	53.8	52.8	51.7	42.3	40.6	39.5	38.4	32.7	31.0	29.9	28.8	0.6	1.4	2.2
AST109-257-01-00-02-01	3.41	3.96	66.5	64.9	63.9	63.0	55.6	53.3	51.9	50.5	42.1	39.8	38.4	37.0	32.6	30.2	28.6	27.0	0.7	1.6	2.5
AST109-257-01-01-00-01	3.41	3.96	66.5	64.9	63.9	63.0	55.6	53.3	51.9	50.5	42.1	39.8	38.4	37.0	32.6	30.2	28.6	27.0	0.7	1.6	2.6
AST109-257-01-00-03-00	3.91	4.46	66.5	64.9	63.9	63.0	55.6	53.3	51.9	50.5	42.1	39.8	38.4	37.0	32.6	30.2	28.6	27.0	0.7	1.7	2.7
AST109-257-01-01-01-00	3.91	4.46	66.5	64.9	63.9	63.0	55.6	53.3	51.9	50.5	42.1	39.8	38.4	37.0	32.6	30.2	28.6	27.0	0.7	1.8	2.8
AST109-257-01-00-03-01	4.41	4.96	65.7	63.7	62.6	61.5	55.6	52.7	51.0	49.2	41.9	39.0	37.4	35.7	32.4	29.4	27.3	25.3	0.8	2.0	3.1
AST109-257-01-01-01-01	4.41	4.96	65.7	63.7	62.6	61.5	55.6	52.7	51.0	49.2	41.9	39.0	37.4	35.7	32.4	29.4	27.3	25.3	0.9	2.0	3.2
AST109-257-01-00-04-00	4.91	5.46	65.7	63.7	62.6	61.5	55.6	52.7	51.0	49.2	41.9	39.0	37.4	35.7	32.4	29.4	27.3	25.3	0.9	2.1	3.3
AST109-257-01-02-00-00	4.91	5.46	65.7	63.7	62.6	61.5	55.6	52.7	51.0	49.2	41.9	39.0	37.4	35.7	32.4	29.4	27.3	25.3	0.9	2.2	3.4
AST109-257-01-00-04-01	5.41	5.96	64.9	62.6	61.3	60.0	55.6	52.2	50.1	48.0	41.7	38.3	36.3	34.3	32.3	28.6	26.0	23.5	1.0	2.3	3.7
AST109-257-01-02-00-01	5.41	5.96	64.9	62.6	61.3	60.0	55.6	52.2	50.1	48.0	41.7	38.3	36.3	34.3	32.3	28.6	26.0	23.5	1.1	2.4	3.8
AST109-257-01-00-05-00	5.91	6.46	64.9	62.6	61.3	60.0	55.6	52.2	50.1	48.0	41.7	38.3	36.3	34.3	32.3	28.6	26.0	23.5	1.0	2.5	3.9
AST109-257-01-02-01-00	5.91	6.46	64.9	62.6	61.3	60.0	55.6	52.2	50.1	48.0	41.7	38.3	36.3	34.3	32.3	28.6	26.0	23.5	1.1	2.5	4.0
AST109-257-01-00-05-01	6.41	6.96	64.1	61.5	60.0	58.5	55.6	51.7	49.2	46.8	41.5	37.5	35.2	32.9	32.1	27.9	24.7	21.8	1.2	2.7	4.3
AST109-257-01-02-01-01	6.41	6.96	64.1	61.5	60.0	58.5	55.6	51.7	49.2	46.8	41.5	37.5	35.2	32.9	32.1	27.9	24.7	21.8	1.2	2.8	4.4
AST109-257-01-00-06-00	6.91	7.46	64.1	61.5	60.0	58.5	55.6	51.7	49.2	46.8	41.5	37.5	35.2	32.9	32.1	27.9	24.7	21.8	1.2	2.8	4.4
AST109-257-01-03-00-00	6.91	7.46	64.1	61.5	60.0	58.5	55.6	51.7	49.2	46.8	41.5	37.5	35.2	32.9	32.1	27.9	24.7	21.8	1.3	2.9	4.6
AST109-257-01-00-06-01	7.41	7.96	64.1	61.2	59.5	56.8	55.4	50.9	48.1	45.3	41.2	36.6	33.7	30.8	31.5	26.4	22.9	19.6	1.3	3.1	4.9
AST109-257-01-03-00-01	7.41	7.96	64.1	61.2	59.5	56.8	55.4	50.9	48.1	45.3	41.2	36.6	33.7	30.8	31.5	26.4	22.9	19.6	1.4	3.2	5.0
AST109-257-01-00-07-00	7.91	8.46	64.1	61.2	59.5	56.8	55.4	50.9	48.1	45.3	41.2	36.6	33.7	30.8	31.5	26.4	22.9	19.6	1.4	3.2	5.0
AST109-257-01-03-01-00	7.91	8.46	64.1	61.2	59.5	56.8	55.4	50.9	48.1	45.3	41.2	36.6	33.7	30.8	31.5	26.4	22.9	19.6	1.5	3.3	5.2
AST109-257-01-00-07-01	8.41	8.96	64.1	60.9	59.0	55.2	55.3	50.2	47.0	43.9	40.9	35.7	32.3	28.6	31.0	25.0	21.1	17.4	1.5	3.5	5.4
AST109-257-01-03-01-01	8.41	8.96	64.1	60.9	59.0	55.2	55.3	50.2	47.0	43.9	40.9	35.7	32.3	28.6	31.0	25.0	21.1	17.4	1.6	3.6	5.6
AST109-257-01-00-08-00	8.91	9.46	64.1	60.9	59.0	55.2	55.3	50.2	47.0	43.9	40.9	35.7	32.3	28.6	31.0	25.0	21.1	17.4	1.5	3.6	5.6
AST109-257-01-04-00-00	8.91	9.46	64.1	60.9	59.0	55.2	55.3	50.2	47.0	43.9	40.9	35.7	32.3	28.6	31.0	25.0	21.1	17.4	1.7	3.7	5.8
AST109-257-01-00-08-01	9.41	9.96	64.1	60.6	58.6	53.6	55.1	49.4	45.9	42.4	40.5	34.8	30.8	26.5	30.4	23.5	19.3	15.2	1.7	3.8	6.0
AST109-257-01-04-00-01	9.41	9.96	64.1	60.6	58.6	53.6	55.1	49.4	45.9	42.4	40.5	34.8	30.8	26.5	30.4	23.5	19.3	15.2	1.8	4.0	6.2

Tab. 3.4 cont.

LOCKED TOWER			AST109-257																Minimum Required Load of a Single Rack to Prevent the Base from Slipping Fv_{min} [kN]		
			Permissible load *Fv* per single tower rack [kN]																		
			$S_{integr.}$=10 cm (S_p=6 cm; S_g=4 cm)				$S_{integr.}$=30 cm (S_p=18 cm; S_g=12 cm)				$S_{integr.}$=50 cm (S_p=30 cm; S_g=20 cm)				$S_{integr.}$=65 cm (S_p=40 cm; S_g=25 cm)						
Tower name	H_{min} [m]	H_{max} [m]	Wind pressure q [kN/m²]				Wind pressure q [kN/m²]				Wind pressure q [kN/m²]				Wind pressure q [kN/m²]				Wind pressure q [kN/m²]		
AST109-257-01-00-09-00	9.91	10.46	64.1	60.6	58.6	53.6	55.1	49.4	45.9	42.4	40.5	34.8	30.8	26.5	30.4	23.5	19.3	15.2	1.7	3.9	6.2
AST109-257-01-04-01-00	9.91	10.46	64.1	60.6	58.6	53.6	55.1	49.4	45.9	42.4	40.5	34.8	30.8	26.5	30.4	23.5	19.3	15.2	1.8	4.1	6.4
AST109-257-01-00-09-01	10.41	10.96	64.2	60.4	58.1	52.0	55.0	48.7	44.8	41.0	40.2	33.9	29.4	24.3	29.9	22.1	17.6	13.1	1.8	4.2	6.6
AST109-257-01-04-01-01	10.41	10.96	64.2	60.4	58.1	52.0	55.0	48.7	44.8	41.0	40.2	33.9	29.4	24.3	29.9	22.1	17.6	13.1	1.9	4.4	6.8
AST109-257-01-00-10-00	10.91	11.46	64.2	60.4	58.1	52.0	55.0	48.7	44.8	41.0	40.2	33.9	29.4	24.3	29.9	22.1	17.6	13.1	1.9	4.3	6.7
AST109-257-01-05-00-00	10.91	11.46	64.2	60.4	58.1	52.0	55.0	48.7	44.8	41.0	40.2	33.9	29.4	24.3	29.9	22.1	17.6	13.1	2.0	4.5	7.0
AST109-257-01-00-10-01	11.41	11.96	64.2	59.8	55.2	47.8	54.9	47.8	43.6	39.5	39.9	32.8	27.6	22.0	29.4	20.8	15.9	-	2.0	4.6	7.2
AST109-257-01-05-00-01	11.41	11.96	64.2	59.8	55.2	47.8	54.9	47.8	43.6	39.5	39.9	32.8	27.6	22.0	29.4	20.8	15.9	-	2.1	4.8	7.4
AST109-257-01-00-11-00	11.91	12.46	64.2	59.8	55.2	47.8	54.9	47.8	43.6	39.5	39.9	32.8	27.6	22.0	29.4	20.8	15.9	-	2.0	4.7	7.3
AST109-257-01-05-01-00	11.91	12.46	64.2	59.8	55.2	47.8	54.9	47.8	43.6	39.5	39.9	32.8	27.6	22.0	29.4	20.8	15.9	-	2.2	4.9	7.6
AST109-257-01-00-11-01	12.41	12.96	64.3	59.3	52.4	43.6	54.9	47.0	42.5	38.0	39.7	31.8	25.8	19.7	28.9	19.6	14.2	-	2.2	4.9	7.7
AST109-257-01-05-01-01	12.41	12.96	64.3	59.3	52.4	43.6	54.9	47.0	42.5	38.0	39.7	31.8	25.8	19.7	28.9	19.6	14.2	-	2.3	5.2	8.0
AST109-257-01-00-12-00	12.91	13.46	64.3	59.3	52.4	43.6	54.9	47.0	42.5	38.0	39.7	31.8	25.8	19.7	28.9	19.6	14.2	-	2.2	5.0	7.9
AST109-257-01-06-00-00	12.91	13.46	64.3	59.3	52.4	43.6	54.9	47.0	42.5	38.0	39.7	31.8	25.8	19.7	28.9	19.6	14.2	-	2.4	5.3	8.2
AST109-257-01-00-12-01	13.41	13.96	64.3	58.7	49.5	39.4	54.8	46.1	41.3	36.6	39.4	30.7	24.0	17.4	28.4	18.4	12.6	-	2.3	5.3	8.3
AST109-257-01-06-00-01	13.41	13.96	64.3	58.7	49.5	39.4	54.8	46.1	41.3	36.6	39.4	30.7	24.0	17.4	28.4	18.4	12.6	-	2.5	5.6	8.6
AST109-257-01-00-13-00	13.91	14.46	64.3	58.7	49.5	39.4	54.8	46.1	41.3	36.6	39.4	30.7	24.0	17.4	28.4	18.4	12.6	-	2.4	5.4	8.5
AST109-257-01-06-01-00	13.91	14.46	64.3	58.7	49.5	39.4	54.8	46.1	41.3	36.6	39.4	30.7	24.0	17.4	28.4	18.4	12.6	-	2.6	5.7	8.8
AST109-257-01-00-13-01	14.41	14.96	64.4	58.2	46.6	35.2	54.7	45.3	40.1	35.1	39.1	29.6	22.2	15.1	27.9	17.2	10.9	-	2.5	5.7	8.9
AST109-257-01-06-01-01	14.41	14.96	64.4	58.2	46.6	35.2	54.7	45.3	40.1	35.1	39.1	29.6	22.2	15.1	27.9	17.2	10.9	-	2.7	5.9	9.2
AST109-257-01-00-14-00	14.91	15.46	64.4	58.2	46.6	35.2	54.7	45.3	40.1	35.1	39.1	29.6	22.2	15.1	27.9	17.2	10.9	-	2.5	5.8	9.0
AST109-257-01-07-00-00	14.91	15.46	64.4	58.2	46.6	35.2	54.7	45.3	40.1	35.1	39.1	29.6	22.2	15.1	27.9	17.2	10.9	-	2.8	6.1	9.4
AST109-257-01-00-14-01	15.41	15.96	64.3	56.0	43.5	31.2	54.6	44.5	39.0	31.5	38.8	28.3	20.5	-	27.6	16.1	10.2	-	2.7	6.1	9.5
AST109-257-01-07-00-01	15.41	15.96	64.3	56.0	43.5	31.2	54.6	44.5	39.0	31.5	38.8	28.3	20.5	-	27.6	16.1	10.2	-	2.9	6.4	9.8
AST109-257-01-00-15-00	15.91	16.46	64.3	56.0	43.5	31.2	54.6	44.5	39.0	31.5	38.8	28.3	20.5	-	27.6	16.1	10.2	-	2.7	6.2	9.6
AST109-257-01-07-01-00	15.91	16.46	64.3	56.0	43.5	31.2	54.6	44.5	39.0	31.5	38.8	28.3	20.5	-	27.6	16.1	10.2	-	2.9	6.5	10.0
AST109-257-01-00-15-01	16.41	16.96	64.2	53.8	40.4	27.1	54.4	43.8	37.9	27.9	38.6	27.1	18.7	-	27.3	15.0	9.6	-	2.8	6.4	10.0
AST109-257-01-07-01-01	16.41	16.96	64.2	53.8	40.4	27.1	54.4	43.8	37.9	27.9	38.6	27.1	18.7	-	27.3	15.0	9.6	-	3.0	6.7	10.4
AST109-257-01-00-16-00	16.91	17.46	64.2	53.8	40.4	27.1	54.4	43.8	37.9	27.9	38.6	27.1	18.7	-	27.3	15.0	9.6	-	2.9	6.5	10.2
AST109-257-01-08-00-00	16.91	17.46	64.2	53.8	40.4	27.1	54.4	43.8	37.9	27.9	38.6	27.1	18.7	-	27.3	15.0	9.6	-	3.1	6.9	10.6
AST109-257-01-00-16-01	17.41	17.96	64.1	51.5	37.2	23.1	54.3	43.0	36.8	24.3	38.3	25.8	17.0	-	26.9	13.8	8.9	-	3.0	6.8	10.6
AST109-257-01-08-00-01	17.41	17.96	64.1	51.5	37.2	23.1	54.3	43.0	36.8	24.3	38.3	25.8	17.0	-	26.9	13.8	8.9	-	3.2	7.1	11.0
AST109-257-01-00-17-00	17.91	18.46	64.1	51.5	37.2	23.1	54.3	43.0	36.8	24.3	38.3	25.8	17.0	-	26.9	13.8	8.9	-	3.0	6.9	10.8
AST109-257-01-08-01-00	17.91	18.46	64.1	51.5	37.2	23.1	54.3	43.0	36.8	24.3	38.3	25.8	17.0	-	26.9	13.8	8.9	-	3.3	7.2	11.2
AST109-257-01-00-17-01	18.41	18.96	64.0	49.3	34.1	19.0	54.1	42.2	35.7	20.7	38.0	24.5	15.2	-	26.6	12.7	8.2	-	3.2	7.2	11.2
AST109-257-01-08-01-01	18.41	18.96	64.0	49.3	34.1	19.0	54.1	42.2	35.7	20.7	38.0	24.5	15.2	-	26.6	12.7	8.2	-	3.4	7.5	11.6
AST109-257-01-00-18-00	18.91	19.46	64.0	49.3	34.1	19.0	54.1	42.2	35.7	20.7	38.0	24.5	15.2	-	26.6	12.7	8.2	-	3.2	7.3	11.3
AST109-257-01-09-00-00	18.91	19.46	64.0	49.3	34.1	19.0	54.1	42.2	35.7	20.7	38.0	24.5	15.2	-	26.6	12.7	8.2	-	3.5	7.7	11.8

3.6 Locked AST109-307 Tower

As a result of the numerical analyses carried out the values of the permissible load *Fv* acting on a single rack of the AST109-307 tower as well as the values of the minimum required load acting on a single rack Fv_{min} to prevent the base from slipping were determined. When the value of the permissible load *Fv* was lower than the value of the minimum required load of a single rack Fv_{min} to prevent slipping of the base the result was rejected and no interpolation was made. The results are summarized in Tab. 3.5. In addition, an example of the graphical summary of the results in the form of graphs for different levels of wind load and different levels of the base protrusion was presentedk (Fig. 3.6).

a)

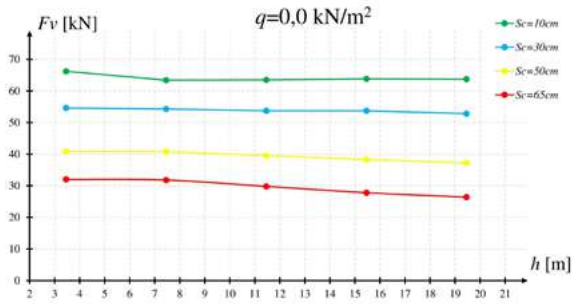

b)

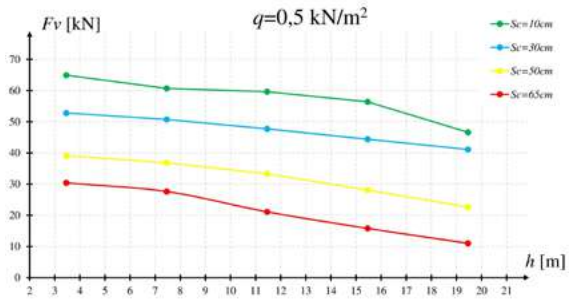

c)

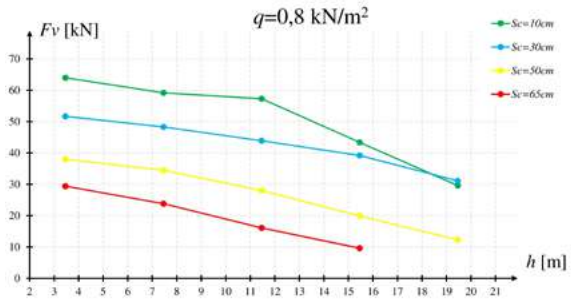

d)

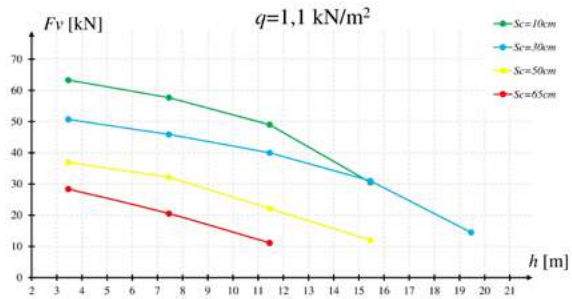

Fig. 3.6
Permissible load of a single rack of the AST109-307 tower with different wind load::
a) q=0,0 kN/m², b) q=0,5 kN/m², c) q=0,8 kN/m², q=1,1 kN/m²

Tab. 3.5 Permissible characteristic (actually occurring on site) loads of locked AST109-307 towers

LOCKED TOWER			AST109-307																Minimum Required Load of a Single Rack to Prevent the Base from Slipping F_{vmin} [kN]		
			Permissible load F_v per single tower rack [kN]																		
			$S_{integr.}$=10 cm (S_p=6cm; S_g=4 cm)				$S_{integr.}$=30 cm (S_p=18 cm; S_g=12 cm)				$S_{integr.}$=50 cm (S_p=30cm; S_g=20 cm)				$S_{integr.}$=65 cm (S_p=40cm; S_g=25 cm)						
Tower name	H_{min} [m]	H_{max} [m]	Wind pressure q [kN/m²]				Wind pressure q [kN/m²]				Wind pressure q [kN/m²]				Wind pressure q [kN/m²]				Wind pressure q [kN/m²]		
			0.0	0.5	0.8	1.1	0.0	0.5	0.8	1.1	0.0	0.5	0.8	1.1	0.0	0.5	0.8	1.1	0.5	0.8	1.1
AST109-307-01-00-00-01	1.41	1.96	66.2	64.9	64.0	63.3	54.6	52.8	51.7	50.7	40.9	39.1	38.0	36.9	32.0	30.4	29.4	28.4	0.4	1.0	1.6
AST109-307-01-00-01-00	1.91	2.46	66.2	64.9	64.0	63.3	54.6	52.8	51.7	50.7	40.9	39.1	38.0	36.9	32.0	30.4	29.4	28.4	0.5	1.1	1.8
AST109-307-01-00-01-01	2.41	2.96	66.2	64.9	64.0	63.3	54.6	52.8	51.7	50.7	40.9	39.1	38.0	36.9	32.0	30.4	29.4	28.4	0.6	1.4	2.3
AST109-307-01-00-02-00	2.91	3.46	66.2	64.9	64.0	63.3	54.6	52.8	51.7	50.7	40.9	39.1	38.0	36.9	32.0	30.4	29.4	28.4	0.7	1.5	2.4
AST109-307-01-01-00-00	2.91	3.46	66.2	64.9	64.0	63.3	54.6	52.8	51.7	50.7	40.9	39.1	38.0	36.9	32.0	30.4	29.4	28.4	0.7	1.6	2.5
AST109-307-01-00-02-01	3.41	3.96	65.5	63.9	62.8	61.9	54.5	52.3	50.9	49.5	40.9	38.5	37.1	35.7	32.0	29.7	28.0	26.4	0.8	1.9	2.9
AST109-307-01-01-00-01	3.41	3.96	65.5	63.9	62.8	61.9	54.5	52.3	50.9	49.5	40.9	38.5	37.1	35.7	32.0	29.7	28.0	26.4	0.8	1.9	3.0
AST109-307-01-00-03-00	3.91	4.46	65.5	63.9	62.8	61.9	54.5	52.3	50.9	49.5	40.9	38.5	37.1	35.7	32.0	29.7	28.0	26.4	0.9	2.0	3.1
AST109-307-01-01-01-00	3.91	4.46	65.5	63.9	62.8	61.9	54.5	52.3	50.9	49.5	40.9	38.5	37.1	35.7	32.0	29.7	28.0	26.4	0.9	2.0	3.1
AST109-307-01-00-03-01	4.41	4.96	64.8	62.8	61.6	60.5	54.5	51.8	50.0	48.3	40.9	38.0	36.3	34.6	31.9	29.0	26.6	24.5	1.0	2.3	3.6
AST109-307-01-01-01-01	4.41	4.96	64.8	62.8	61.6	60.5	54.5	51.8	50.0	48.3	40.9	38.0	36.3	34.6	31.9	29.0	26.6	24.5	1.0	2.3	3.6
AST109-307-01-00-04-00	4.91	5.46	64.8	62.8	61.6	60.5	54.5	51.8	50.0	48.3	40.9	38.0	36.3	34.6	31.9	29.0	26.6	24.5	1.0	2.4	3.7
AST109-307-01-02-00-00	4.91	5.46	64.8	62.8	61.6	60.5	54.5	51.8	50.0	48.3	40.9	38.0	36.3	34.6	31.9	29.0	26.6	24.5	1.1	2.5	3.8
AST109-307-01-00-04-01	5.41	5.96	64.1	61.8	60.4	59.1	54.4	51.2	49.2	47.1	40.8	37.4	35.4	33.4	31.9	28.3	25.2	22.5	1.2	2.7	4.2
AST109-307-01-02-00-01	5.41	5.96	64.1	61.8	60.4	59.1	54.4	51.2	49.2	47.1	40.8	37.4	35.4	33.4	31.9	28.3	25.2	22.5	1.3	2.8	4.3
AST109-307-01-00-05-00	5.91	6.46	64.1	61.8	60.4	59.1	54.4	51.2	49.2	47.1	40.8	37.4	35.4	33.4	31.9	28.3	25.2	22.5	1.2	2.8	4.4
AST109-307-01-02-01-00	5.91	6.46	64.1	61.8	60.4	59.1	54.4	51.2	49.2	47.1	40.8	37.4	35.4	33.4	31.9	28.3	25.2	22.5	1.3	2.9	4.5
AST109-307-01-00-05-01	6.41	6.96	63.4	60.7	59.2	57.7	54.3	50.7	48.3	45.9	40.8	36.8	34.5	32.2	31.8	27.6	23.8	20.5	1.4	3.1	4.9
AST109-307-01-02-01-01	6.41	6.96	63.4	60.7	59.2	57.7	54.3	50.7	48.3	45.9	40.8	36.8	34.5	32.2	31.8	27.6	23.8	20.5	1.4	3.2	5.0
AST109-307-01-00-06-00	6.91	7.46	63.4	60.7	59.2	57.7	54.3	50.7	48.3	45.9	40.8	36.8	34.5	32.2	31.8	27.6	23.8	20.5	1.4	3.2	5.0
AST109-307-01-03-00-00	6.91	7.46	63.4	60.7	59.2	57.7	54.3	50.7	48.3	45.9	40.8	36.8	34.5	32.2	31.8	27.6	23.8	20.5	1.5	3.4	5.2
AST109-307-01-00-06-01	7.41	7.96	63.4	60.4	58.7	55.5	54.2	50.0	47.2	44.4	40.5	35.9	32.9	29.7	31.3	26.0	21.9	18.2	1.6	3.6	5.5
AST109-307-01-03-00-01	7.41	7.96	63.4	60.4	58.7	55.5	54.2	50.0	47.2	44.4	40.5	35.9	32.9	29.7	31.3	26.0	21.9	18.2	1.7	3.7	5.7
AST109-307-01-00-07-00	7.91	8.46	63.4	60.4	58.7	55.5	54.2	50.0	47.2	44.4	40.5	35.9	32.9	29.7	31.3	26.0	21.9	18.2	1.6	3.7	5.7
AST109-307-01-03-01-00	7.91	8.46	63.4	60.4	58.7	55.5	54.2	50.0	47.2	44.4	40.5	35.9	32.9	29.7	31.3	26.0	21.9	18.2	1.7	3.8	5.8
AST109-307-01-00-07-01	8.41	8.96	63.5	60.2	58.3	53.4	54.0	49.2	46.1	43.0	40.2	35.1	31.3	27.2	30.8	24.4	20.0	15.8	1.8	4.0	6.2
AST109-307-01-03-01-01	8.41	8.96	63.5	60.2	58.3	53.4	54.0	49.2	46.1	43.0	40.2	35.1	31.3	27.2	30.8	24.4	20.0	15.8	1.9	4.1	6.3
AST109-307-01-00-08-00	8.91	9.46	63.5	60.2	58.3	53.4	54.0	49.2	46.1	43.0	40.2	35.1	31.3	27.2	30.8	24.4	20.0	15.8	1.8	4.1	6.3
AST109-307-01-04-00-00	8.91	9.46	63.5	60.2	58.3	53.4	54.0	49.2	46.1	43.0	40.2	35.1	31.3	27.2	30.8	24.4	20.0	15.8	1.9	4.2	6.5
AST109-307-01-00-08-01	9.41	9.96	63.5	59.9	57.8	51.2	53.9	48.5	45.0	41.5	39.8	34.2	29.6	24.6	30.3	22.7	18.0	13.5	2.0	4.4	6.8
AST109-307-01-04-00-01	9.41	9.96	63.5	59.9	57.8	51.2	53.9	48.5	45.0	41.5	39.8	34.2	29.6	24.6	30.3	22.7	18.0	13.5	2.1	4.6	7.0

Tab. 3.5 cont.

LOCKED TOWER			AST109-307																Minimum Required Load of a Single Rack to Prevent the Base from Slipping Fv_{min} [kN]		
			Permissible load Fv per single tower rack [kN]																		
			$S_{integr.}$=10 cm (Sp=6 cm; Sg=4 cm)				$S_{integr.}$=30 cm (Sp=18 cm; Sg=12 cm)				$S_{integr.}$=50 cm (Sp=30 cm; Sg=20 cm)				$S_{integr.}$=65 cm (Sp=40 cm; Sg=25 cm)						
Tower name	H_{min} [m]	H_{max} [m]	Wind pressure q [kN/m²]				Wind pressure q [kN/m²]				Wind pressure q [kN/m²]				Wind pressure q [kN/m²]				Wind pressure q [kN/m²]		
AST109-307-01-00-09-00	9.91	10.46	63.5	59.9	57.8	51.2	53.9	48.5	45.0	41.5	39.8	34.2	29.6	24.6	30.3	22.7	18.0	13.5	2.0	4.5	7.0
AST109-307-01-04-01-00	9.91	10.46	63.5	59.9	57.8	51.2	53.9	48.5	45.0	41.5	39.8	34.2	29.6	24.6	30.3	22.7	18.0	13.5	2.1	4.7	7.2
AST109-307-01-00-09-01	10.41	10.96	63.5	59.6	57.3	49.0	53.7	47.7	43.9	40.0	39.5	33.3	28.0	22.1	29.8	21.1	16.1	11.1	2.2	4.8	7.5
AST109-307-01-04-01-01	10.41	10.96	63.5	59.6	57.3	49.0	53.7	47.7	43.9	40.0	39.5	33.3	28.0	22.1	29.8	21.1	16.1	11.1	2.3	5.0	7.7
AST109-307-01-00-10-00	10.91	11.46	63.5	59.6	57.3	49.0	53.7	47.7	43.9	40.0	39.5	33.3	28.0	22.1	29.8	21.1	16.1	11.1	2.2	4.9	7.6
AST109-307-01-05-00-00	10.91	11.46	63.5	59.6	57.3	49.0	53.7	47.7	43.9	40.0	39.5	33.3	28.0	22.1	29.8	21.1	16.1	11.1	2.4	5.1	7.9
AST109-307-01-00-10-01	11.41	11.96	63.6	58.8	53.8	44.4	53.7	46.9	42.7	37.8	39.2	32.0	26.0	19.6	29.3	19.8	14.5	-	2.4	5.2	8.1
AST109-307-01-05-00-01	11.41	11.96	63.6	58.8	53.8	44.4	53.7	46.9	42.7	37.8	39.2	32.0	26.0	19.6	29.3	19.8	14.5	-	2.5	5.5	8.4
AST109-307-01-00-11-00	11.91	12.46	63.6	58.8	53.8	44.4	53.7	46.9	42.7	37.8	39.2	32.0	26.0	19.6	29.3	19.8	14.5	-	2.4	5.3	8.3
AST109-307-01-05-01-00	11.91	12.46	63.6	58.8	53.8	44.4	53.7	46.9	42.7	37.8	39.2	32.0	26.0	19.6	29.3	19.8	14.5	-	2.6	5.6	8.5
AST109-307-01-00-11-01	12.41	12.96	63.7	58.0	50.4	39.8	53.7	46.1	41.6	35.5	38.9	30.7	24.0	17.1	28.8	18.5	12.9	-	2.5	5.7	8.8
AST109-307-01-05-01-01	12.41	12.96	63.7	58.0	50.4	39.8	53.7	46.1	41.6	35.5	38.9	30.7	24.0	17.1	28.8	18.5	12.9	-	2.7	5.9	9.0
AST109-307-01-00-12-00	12.91	13.46	63.7	58.0	50.4	39.8	53.7	46.1	41.6	35.5	38.9	30.7	24.0	17.1	28.8	18.5	12.9	-	2.6	5.8	8.9
AST109-307-01-06-00-00	12.91	13.46	63.7	58.0	50.4	39.8	53.7	46.1	41.6	35.5	38.9	30.7	24.0	17.1	28.8	18.5	12.9	-	2.8	6.0	9.3
AST109-307-01-00-12-01	13.41	13.96	63.7	57.2	46.9	35.1	53.7	45.2	40.4	33.3	38.6	29.4	21.9	14.5	28.3	17.1	11.2	-	2.7	6.1	9.4
AST109-307-01-06-00-01	13.41	13.96	63.7	57.2	46.9	35.1	53.7	45.2	40.4	33.3	38.6	29.4	21.9	14.5	28.3	17.1	11.2	-	2.9	6.3	9.8
AST109-307-01-00-13-00	13.91	14.46	63.7	57.2	46.9	35.1	53.7	45.2	40.4	33.3	38.6	29.4	21.9	14.5	28.3	17.1	11.2	-	2.8	6.2	9.6
AST109-307-01-06-01-00	13.91	14.46	63.7	57.2	46.9	35.1	53.7	45.2	40.4	33.3	38.6	29.4	21.9	14.5	28.3	17.1	11.2	-	3.0	6.4	9.9
AST109-307-01-00-13-01	14.41	14.96	63.8	56.4	43.4	30.5	53.7	44.4	39.2	31.0	38.3	28.1	19.9	12.0	27.8	15.8	9.6	-	2.9	6.5	10.1
AST109-307-01-06-01-01	14.41	14.96	63.8	56.4	43.4	30.5	53.7	44.4	39.2	31.0	38.3	28.1	19.9	12.0	27.8	15.8	9.6	-	3.1	6.8	10.4
AST109-307-01-00-14-00	14.91	15.46	63.8	56.4	43.4	30.5	53.7	44.4	39.2	31.0	38.3	28.1	19.9	12.0	27.8	15.8	9.6	-	3.0	6.6	10.2
AST109-307-01-07-00-00	14.91	15.46	63.8	56.4	43.4	30.5	53.7	44.4	39.2	31.0	38.3	28.1	19.9	12.0	27.8	15.8	9.6	-	3.2	6.9	10.6
AST109-307-01-00-14-01	15.41	15.96	63.8	54.0	40.0	-	53.5	43.6	37.2	26.9	38.0	26.7	18.0	-	27.5	14.6	-	-	3.1	6.9	10.7
AST109-307-01-07-00-01	15.41	15.96	63.8	54.0	40.0	-	53.5	43.6	37.2	26.9	38.0	26.7	18.0	-	27.5	14.6	-	-	3.3	7.2	11.1
AST109-307-01-00-15-00	15.91	16.46	63.8	54.0	40.0	-	53.5	43.6	37.2	26.9	38.0	26.7	18.0	-	27.5	14.6	-	-	3.2	7.0	10.9
AST109-307-01-07-01-00	15.91	16.46	63.8	54.0	40.0	-	53.5	43.6	37.2	26.9	38.0	26.7	18.0	-	27.5	14.6	-	-	3.4	7.3	11.3
AST109-307-01-00-15-01	16.41	16.96	63.8	51.5	36.5	-	53.3	42.8	35.2	22.8	37.8	25.4	16.1	-	27.1	13.4	-	-	3.3	7.4	11.4
AST109-307-01-07-01-01	16.41	16.96	63.8	51.5	36.5	-	53.3	42.8	35.2	22.8	37.8	25.4	16.1	-	27.1	13.4	-	-	3.5	7.6	11.8
AST109-307-01-00-16-00	16.91	17.46	63.8	51.5	36.5	-	53.3	42.8	35.2	22.8	37.8	25.4	16.1	-	27.1	13.4	-	-	3.4	7.5	11.5
AST109-307-01-08-00-00	16.91	17.46	63.8	51.5	36.5	-	53.3	42.8	35.2	22.8	37.8	25.4	16.1	-	27.1	13.4	-	-	3.6	7.8	12.0
AST109-307-01-00-16-01	17.41	17.96	63.7	49.1	33.1	-	53.0	41.9	33.1	18.6	37.5	24.0	14.2	-	26.8	12.2	-	-	3.5	7.8	12.0
AST109-307-01-08-00-01	17.41	17.96	63.7	49.1	33.1	-	53.0	41.9	33.1	18.6	37.5	24.0	14.2	-	26.8	12.2	-	-	3.8	8.1	12.5
AST109-307-01-00-17-00	17.91	18.46	63.7	49.1	33.1	-	53.0	41.9	33.1	18.6	37.5	24.0	14.2	-	26.8	12.2	-	-	3.6	7.9	12.2
AST109-307-01-08-01-00	17.91	18.46	63.7	49.1	33.1	-	53.0	41.9	33.1	18.6	37.5	24.0	14.2	-	26.8	12.2	-	-	3.8	8.2	12.6
AST109-307-01-00-17-01	18.41	18.96	63.7	46.6	29.6	-	52.8	41.1	31.1	14.5	37.2	22.6	12.3	-	26.4	11.0	-	-	3.7	8.2	12.7
AST109-307-01-08-01-01	18.41	18.96	63.7	46.6	29.6	-	52.8	41.1	31.1	14.5	37.2	22.6	12.3	-	26.4	11.0	-	-	4.0	8.5	13.1
AST109-307-01-00-18-00	18.91	19.46	63.7	46.6	29.6	-	52.8	41.1	31.1	14.5	37.2	22.6	12.3	-	26.4	11.0	-	-	3.8	8.3	12.8
AST109-307-01-09-00-00	18.91	19.46	63.7	46.6	29.6	-	52.8	41.1	31.1	14.5	37.2	22.6	12.3	-	26.4	11.0	-	-	4.0	8.7	13.3

4. FREE TOWERS

The calculations performed for the free towers included towers with heights of 2.96 m, 3.46 m, 5.96 m, 6.46 m. For each tower height two wind load directions were considered and two variants of intermediate frames were specified (frames with a height of 1m and 2 m were considered). The load capacity values given in the list are the minimum values for the individual variants. The results for the remaining heights of the towers were obtained on the basis of linear interpolation.

4.1 Static diagram

The static diagram of an example of a free tower is shown in Fig. 4.1. For this tower assembly the load included:

- dead weight
- wind load
- horizontal force F_H
- horizontal force, equal to 1% of the vertical load *Fv* (according to the recommendations of PN-EN 12812 sec. 8.2.2.2)
- vertical force *Fv*
- bending moment of *Fv*·5 mm (according to the recommendations of PN-EN 12812 sec. 9.3.6).

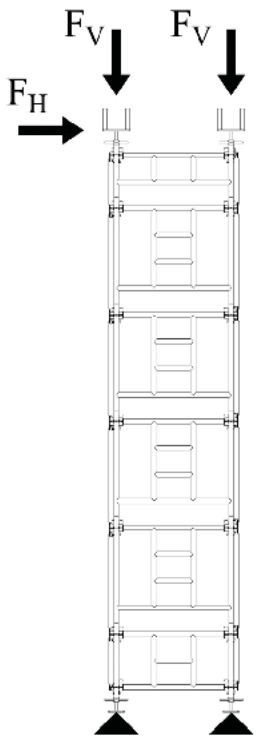

Fig. 4.1
Static diagram of the free tower

When determining the value of the minimum required load of a single rack Fv_{min}, that prevents the tower from tipping over, the following formula was used (PN-EN 12812 sec 9.2.2.3.3):

$$M_{dst.d} \leq M_{stb,fd}, \text{ where:}$$

$M_{dst.d}$ – turning moment caused by a load in the form of: wind load, horizontal load F_H, horizontal load constituting 1% of the vertical load,

$M_{stb,fd}$ – holding moment provided by the dead weight of the structure and the minimum required load of a single rack Fv_{min} (the load includes the load application eccentricity of 5 mm).

4.2 Free AST109-109 tower

W As a result of the numerical analyses carried out the values of the permissible load *Fv* acting on a single rack of the AST109-109 tower as well as the values of the minimum required load acting on a single rack Fv_{min} to prevent the tower from tipping over were determined. When the value of the permissible load *Fv* was lower than the value of the minimum required load of a single rack Fv_{min} to prevent the tower from tipping over the result was rejected and no

interpolation was made. The results are summarized in Tab. 4.1. In addition, examples of graphical summary of the results in the form of graphs with different levels of wind load, different levels of horizontal force *FH* and different levels of base protrusion Sc for towers with a height of 2.96 m (Fig. 4.2) and 6.46 m (Fig. 4.3) are presented.

a) b)

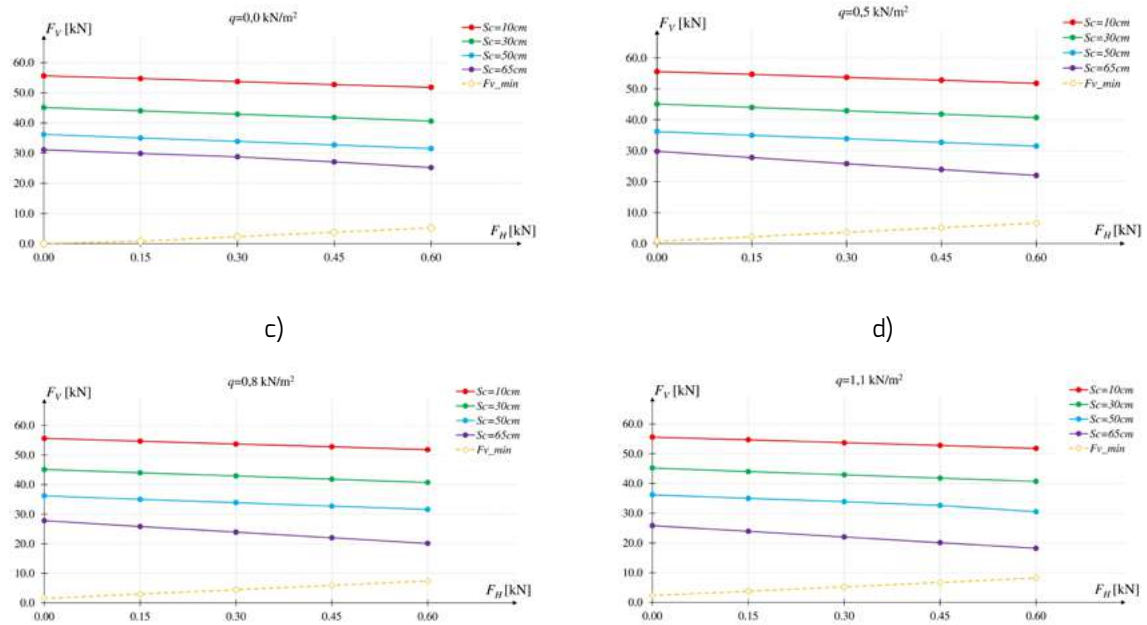

c) d)

Fig. 4.2

Permissible load of a single rack of the AST109-109-01-00-01-01 tower (Hmax=2.96 m) with different wind load:
a) q=0.0 kN/m² / b) q=0.5 kN/m² / c) q=0.8 kN/m² / d) q=1.1 kN/m²

a) b)

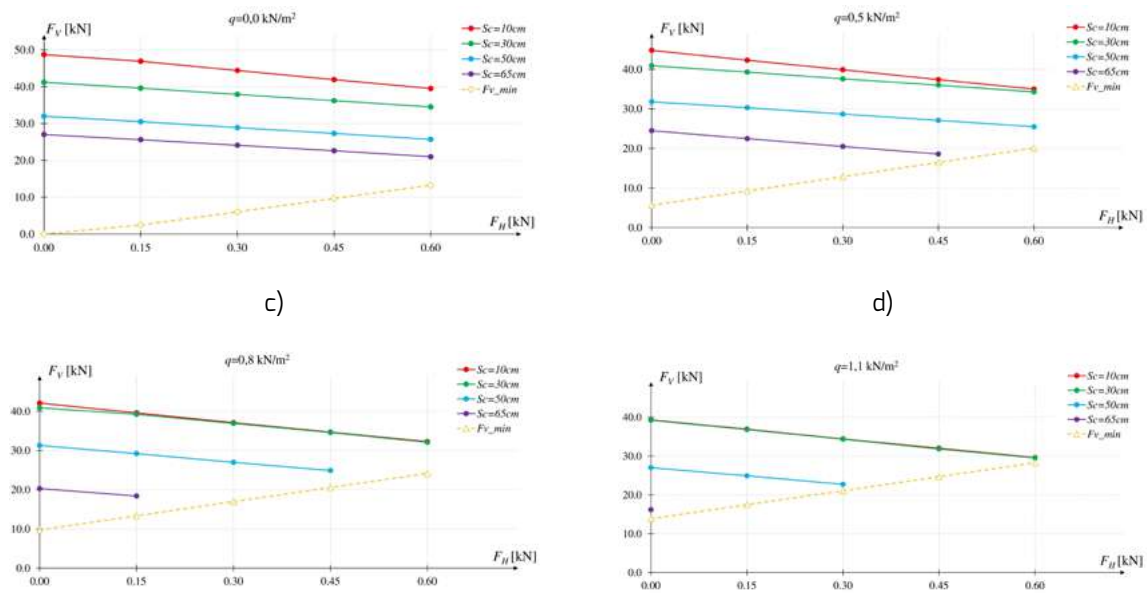

c) d)

Fig. 4.3

Permissible load of a single rack of the AST109-109-01-02-01-00 tower (Hmax=6.46 m) with different wind load:
a) q=0.0 kN/m² / b) q=0.5 kN/m² / c) q=0.8 kN/m² / d) q=1.1 kN/m²

Tab. 4.1 Permissible characteristic (actually occurring on site) loads of free AST109-109 towers

FREE TOWER				AST109-109																Minimum required load of a single rack to prevent the tower from tipping over *Fv min* [kN]			
				Permissible load *Fv per* single tower rack [kN]																			
Horizontal load	Tower name	H_{min} [m]	H_{max} [m]	*Sintegr.*=10 cm (*Sp*=6 cm; *Sg*=4 cm)				*Sintegr.*=30 cm (*Sp*=18 cm; *Sg*=12 cm)				*Sintegr.*=50 cm (*Sp*=30 cm; *Sg*=20 cm)				*Sintegr.*=65 cm (*Sp*=40 cm; *Sg*=25 cm)							
				Wind pressure *q* [kN/m²]				Wind pressure *q* [kN/m²]/				Wind pressure *q* [kN/m²]				Wind pressure *q* [kN/m²]				Wind pressure *q* [kN/m²]			
				0.0	0.5	0.8	1.1	0.0	0.5	0.8	1.1	0.0	0.5	0.8	1.1	0.0	0.5	0.8	1.1	0.0	0.5	0.8	1.1
F_H=0.0 kN	AST109-109-01-00-00-01	1.41	1.96	55.6	55.6	55.6	55.6	45.1	45.1	45.1	45.2	36.2	36.2	36.2	36.2	31.1	29.8	27.8	25.8	0.0	0.1	0.5	0.8
	AST109-109-01-00-01-00	1.91	2.46	55.1	53.1	51.7	50.3	42.3	42.2	42.1	42.1	32.7	32.6	32.6	32.5	27.5	27.5	26.8	24.6	0.0	0.4	0.9	1.5
	AST109-109-01-00-01-01	2.41	2.96	55.6	55.6	55.6	55.6	45.1	45.1	45.1	45.2	36.2	36.2	36.2	36.2	31.1	29.8	27.8	25.8	0.0	0.7	1.5	2.3
	AST109-109-01-00-02-00	2.91	3.46	55.1	53.1	51.7	50.3	42.3	42.2	42.1	42.1	32.7	32.6	32.6	32.5	27.5	27.5	26.8	24.6	0.0	1.1	2.2	3.3
	AST109-109-01-01-00-00	2.91	3.46	55.1	53.1	51.7	50.3	42.3	42.2	42.1	42.1	32.7	32.6	32.6	32.5	27.5	27.5	26.8	24.6	0.0	1.1	2.2	3.3
	AST109-109-01-00-02-01	3.41	3.96	53.8	52.8	52.2	51.1	45.0	45.0	45.0	44.2	36.1	36.1	35.0	33.7	31.0	28.3	25.6	23.0	0.0	1.6	3.1	4.6
	AST109-109-01-01-00-01	3.41	3.96	53.8	52.8	52.2	51.1	45.0	45.0	45.0	44.2	36.1	36.1	35.0	33.7	31.0	28.3	25.6	23.0	0.0	1.7	3.1	4.6
	AST109-109-01-00-03-00	3.91	4.46	53.0	50.3	48.5	46.6	41.9	41.8	41.7	41.1	32.5	32.3	32.2	30.7	27.3	26.5	24.6	21.8	0.0	2.2	4.1	5.9
	AST109-109-01-01-01-00	3.91	4.46	53.0	50.3	48.5	46.6	41.9	41.8	41.7	41.1	32.5	32.3	32.2	30.7	27.3	26.5	24.6	21.8	0.0	2.2	4.1	5.9
	AST109-109-01-00-03-01	4.41	4.96	52.1	50.1	48.7	46.5	44.9	44.9	44.9	43.2	36.1	36.1	33.9	31.1	31.0	26.7	23.5	20.2	0.0	3.0	5.3	7.7
	AST109-109-01-01-01-01	4.41	4.96	52.1	50.1	48.7	46.5	44.9	44.9	44.9	43.2	36.1	36.1	33.9	31.1	31.0	26.7	23.5	20.2	0.0	3.0	5.3	7.7
	AST109-109-01-00-04-00	4.91	5.46	50.8	47.6	45.3	43.0	41.6	41.3	41.3	40.2	32.2	32.1	31.7	28.8	27.2	25.5	22.5	19.0	0.0	3.7	6.6	9.4
	AST109-109-01-02-00-00	4.91	5.46	50.8	47.6	45.3	43.0	41.6	41.3	41.3	40.2	32.2	32.1	31.7	28.8	27.2	25.5	22.5	19.0	0.0	3.7	6.6	9.4
	AST109-109-01-00-04-01	5.41	5.96	50.3	47.3	45.3	42.0	44.8	44.8	44.8	42.2	36.0	36.0	32.7	28.6	30.9	25.2	21.3	17.4	0.0	4.7	8.2	11.7
	AST109-109-01-02-00-01	5.41	5.96	50.3	47.3	45.3	42.0	44.8	44.8	44.8	42.2	36.0	36.0	32.7	28.6	30.9	25.2	21.3	17.4	0.0	4.7	8.2	11.7
	AST109-109-01-00-05-00	5.91	6.46	48.7	44.8	42.1	39.3	41.2	40.9	40.9	39.2	32.0	31.8	31.3	27.0	27.0	24.5	20.3	16.2	0.0	5.7	9.8	13.9
	AST109-109-01-02-01-00	5.91	6.46	48.7	44.8	42.1	39.3	41.2	40.9	40.9	39.2	32.0	31.8	31.3	27.0	27.0	24.5	20.3	16.2	0.0	5.7	9.8	13.9
F_H=0.15 kN	AST109-109-01-00-00-01	1.41	1.96	54.7	54.7	54.7	54.7	44.0	44.0	44.0	44.0	35.0	35.0	35.0	35.0	29.9	27.8	25.8	23.9	0.5	1.1	1.5	1.8
	AST109-109-01-00-01-00	1.91	2.46	52.7	50.4	49.0	47.6	40.7	40.5	40.4	40.4	31.1	31.0	31.0	30.9	26.1	26.0	24.9	22.7	0.7	1.6	2.2	2.7
	AST109-109-01-00-01-01	2.41	2.96	54.7	54.7	54.7	54.7	44.0	44.0	44.0	44.0	35.0	35.0	35.0	35.0	29.9	27.8	25.8	23.9	0.8	2.2	3.0	3.8
	AST109-109-01-00-02-00	2.91	3.46	52.7	50.4	49.0	47.6	40.7	40.5	40.4	40.4	31.1	31.0	31.0	30.9	26.1	26.0	24.9	22.7	1.1	2.9	3.9	5.0
	AST109-109-01-01-00-00	2.91	3.46	52.7	50.4	49.0	47.6	40.7	40.5	40.4	40.4	31.1	31.0	31.0	30.9	26.1	26.0	24.9	22.7	1.1	2.9	3.9	5.0
	AST109-109-01-00-02-01	3.41	3.96	52.4	51.4	50.7	49.6	43.9	43.9	43.6	42.6	35.0	34.9	33.5	32.1	29.8	26.3	23.6	21.1	1.2	3.7	5.1	6.6
	AST109-109-01-01-00-01	3.41	3.96	52.4	51.4	50.7	49.6	43.9	43.9	43.6	42.6	35.0	34.9	33.5	32.1	29.8	26.3	23.6	21.1	1.2	3.7	5.1	6.6
	AST109-109-01-00-03-00	3.91	4.46	50.8	47.7	45.9	44.0	40.3	40.1	40.0	39.2	30.9	30.8	30.4	28.9	25.9	24.8	22.7	-	1.5	4.5	6.4	8.2
	AST109-109-01-01-01-00	3.91	4.46	50.8	47.7	45.9	44.0	40.3	40.1	40.0	39.2	30.9	30.8	30.4	28.9	25.9	24.8	22.7	-	1.5	4.6	6.4	8.2
	AST109-109-01-00-03-01	4.41	4.96	50.1	48.1	46.6	44.4	43.8	43.7	43.3	41.3	34.9	34.7	32.0	29.3	29.8	24.7	21.5	18.3	1.7	5.6	7.9	10.3
	AST109-109-01-01-01-01	4.41	4.96	50.1	48.1	46.6	44.4	43.8	43.7	43.3	41.3	34.9	34.7	32.0	29.3	29.8	24.7	21.5	18.3	1.7	5.6	8.0	10.3
	AST109-109-01-00-04-00	4.91	5.46	48.8	45.0	42.7	40.5	40.0	39.7	39.6	38.0	30.7	30.5	29.8	26.9	25.8	23.7	20.6	-	1.9	6.7	9.5	12.3
	AST109-109-01-02-00-00	4.91	5.46	48.8	45.0	42.7	40.5	40.0	39.7	39.6	38.0	30.7	30.5	29.8	26.9	25.8	23.7	20.6	-	2.0	6.7	9.5	12.4
	AST109-109-01-00-04-01	5.41	5.96	47.8	44.8	42.6	39.3	43.7	43.6	42.9	39.9	34.9	34.6	30.5	26.4	29.7	23.2	19.3	15.5	2.2	8.0	11.5	15.0
	AST109-109-01-02-00-01	5.41	5.96	47.8	44.8	42.6	39.3	43.7	43.6	42.9	39.9	34.9	34.6	30.5	26.4	29.7	23.2	19.3	15.5	2.2	8.0	11.5	15.0
	AST109-109-01-00-05-00	5.91	6.46	46.9	42.3	39.6	36.9	39.6	39.3	39.2	36.8	30.5	30.3	29.2	24.9	25.6	22.5	18.4	-	2.4	9.3	13.4	17.5
	AST109-109-01-02-01-00	5.91	6.46	46.9	42.3	39.6	36.9	39.6	39.3	39.2	36.8	30.5	30.3	29.2	24.9	25.6	22.5	18.4	-	2.5	9.3	13.4	17.5

Tab. 4.1 cont.

FREE TOWER				AST109-109																Minimum required load of a single rack to prevent the tower from tipping over $F_{v\,min}$ [kN]			
				Permissible load F_v per single tower rack [kN]																			
				$S_{integr.}$ =10 cm (S_p=6 cm; S_g=4 cm)				$S_{integr.}$ =30 cm (S_p=18 cm; S_g=12 cm)				$S_{integr.}$ =50 cm (S_p=30 cm; S_g=20 cm)				$S_{integr.}$ =65 cm (S_p=40 cm; S_g=25 cm)							
Horizontal load	Tower name	H_{min} [m]	H_{max} [m]	Wind pressure q [kN/m²]				Wind pressure q [kN/m²]/				Wind pressure q [kN/m²]				Wind pressure q [kN/m²]				Wind pressure q [kN/m²]			
				0.0	0.5	0.8	1.1	0.0	0.5	0.8	1.1	0.0	0.5	0.8	1.1	0.0	0.5	0.8	1.1	0.0	0.5	0.8	1.1
F_H=0.30 kN	AST109-109-01-00-00-01	1.41	1.96	53.7	53.7	53.7	53.7	42.9	42.9	42.9	42.9	33.9	33.9	33.9	33.9	28.8	25.8	23.9	22.0	1.5	2.1	2.4	2.8
	AST109-109-01-00-01-00	1.91	2.46	50.2	47.8	46.4	44.9	39.0	38.8	38.7	38.7	29.5	29.4	29.4	29.3	24.6	24.5	22.9	20.7	2.0	2.9	3.4	4.0
	AST109-109-01-00-01-01	2.41	2.96	53.7	53.7	53.7	53.7	42.9	42.9	42.9	42.9	33.9	33.9	33.9	33.9	28.8	25.8	23.9	22.0	2.3	3.6	4.4	5.2
	AST109-109-01-00-02-00	2.91	3.46	50.2	47.8	46.4	44.9	39.0	38.8	38.7	38.7	29.5	29.4	29.4	29.3	24.6	24.5	22.9	20.7	2.8	4.6	5.7	6.8
	AST109-109-01-01-00-00	2.91	3.46	50.2	47.8	46.4	44.9	39.0	38.8	38.7	38.7	29.5	29.4	29.4	29.3	24.6	24.5	22.9	20.7	2.8	4.6	5.7	6.8
	AST109-109-01-00-02-01	3.41	3.96	50.9	49.9	49.1	48.0	42.8	42.7	42.1	41.0	33.8	33.4	32.0	30.7	28.5	24.3	21.7	-	3.3	5.7	7.2	8.6
	AST109-109-01-01-00-01	3.41	3.96	50.9	49.9	49.1	48.0	42.8	42.7	42.1	41.0	33.8	33.4	32.0	30.7	28.5	24.3	21.7	-	3.3	5.7	7.2	8.6
	AST109-109-01-00-03-00	3.91	4.46	48.3	45.2	43.3	41.4	38.6	38.4	38.1	37.2	29.3	29.2	28.6	27.1	24.4	23.2	-	-	3.8	6.9	8.7	10.5
	AST109-109-01-01-01-00	3.91	4.46	48.3	45.2	43.3	41.4	38.6	38.4	38.1	37.2	29.3	29.2	28.6	27.1	24.4	23.2	-	-	3.8	6.9	8.7	10.6
	AST109-109-01-00-03-01	4.41	4.96	48.1	46.1	44.6	42.3	42.6	42.5	41.3	39.2	33.7	33.0	30.2	27.5	28.2	22.7	19.6	-	4.3	8.2	10.6	12.9
	AST109-109-01-01-01-01	4.41	4.96	48.1	46.1	44.6	42.3	42.6	42.5	41.3	39.2	33.7	33.0	30.2	27.5	28.2	22.7	19.6	-	4.3	8.2	10.6	12.9
	AST109-109-01-00-04-00	4.91	5.46	46.3	42.5	40.2	37.9	38.3	38.0	37.5	35.8	29.1	28.9	27.8	24.9	24.3	21.8	-	-	4.9	9.6	12.4	15.3
	AST109-109-01-02-00-00	4.91	5.46	46.3	42.5	40.2	37.9	38.3	38.0	37.5	35.8	29.1	28.9	27.8	24.9	24.3	21.8	-	-	4.9	9.6	12.5	15.3
	AST109-109-01-00-04-01	5.41	5.96	45.3	42.3	40.0	36.6	42.5	42.3	40.5	37.3	33.6	32.5	28.3	24.3	27.9	21.2	17.4	-	5.4	11.2	14.7	18.2
	AST109-109-01-02-00-01	5.41	5.96	45.3	42.3	40.0	36.6	42.5	42.3	40.5	37.3	33.6	32.5	28.3	24.3	27.9	21.2	17.4	-	5.4	11.3	14.8	18.2
	AST109-109-01-00-05-00	5.91	6.46	44.4	39.9	37.1	34.4	37.9	37.6	36.9	34.3	28.9	28.7	27.0	22.7	24.1	20.5	-	-	6.1	12.9	17.0	21.1
	AST109-109-01-02-01-00	5.91	6.46	44.4	39.9	37.1	34.4	37.9	37.6	36.9	34.3	28.9	28.7	27.0	22.7	24.1	20.5	-	-	6.1	12.9	17.0	21.1
F_H=0.45 kN	AST109-109-01-00-00-01	1.41	1.96	52.7	52.8	52.8	52.8	41.8	41.8	41.8	41.8	32.7	32.7	32.7	32.6	27.1	23.9	22.0	20.1	2.4	3.0	3.4	3.8
	AST109-109-01-00-01-00	1.91	2.46	47.5	45.1	43.8	42.4	37.2	37.1	37.1	37.0	27.9	27.8	27.8	27.7	23.1	23.0	21.0	18.9	3.2	4.1	4.7	5.2
	AST109-109-01-00-01-01	2.41	2.96	52.7	52.8	52.8	52.8	41.8	41.8	41.8	41.8	32.7	32.7	32.7	32.6	27.1	23.9	22.0	20.1	3.8	5.1	5.9	6.7
	AST109-109-01-00-02-00	2.91	3.46	47.5	45.1	43.8	42.4	37.2	37.1	37.1	37.0	27.9	27.8	27.8	27.7	23.1	23.0	21.0	18.9	4.6	6.4	7.4	8.5
	AST109-109-01-01-00-00	2.91	3.46	47.5	45.1	43.8	42.4	37.2	37.1	37.1	37.0	27.9	27.8	27.8	27.7	23.1	23.0	21.0	18.9	4.6	6.4	7.4	8.5
	AST109-109-01-00-02-01	3.41	3.96	49.4	48.5	47.6	46.5	41.7	41.1	40.5	39.4	32.6	31.9	30.5	29.1	26.7	22.4	-	-	5.3	7.7	9.2	10.7
	AST109-109-01-01-00-01	3.41	3.96	49.4	48.5	47.6	46.5	41.7	41.1	40.5	39.4	32.6	31.9	30.5	29.1	26.7	22.4	-	-	5.3	7.8	9.2	10.7
	AST109-109-01-00-03-00	3.91	4.46	45.6	42.5	40.8	38.9	36.9	36.7	36.3	35.3	27.7	27.6	26.8	-	22.9	21.5	-	-	6.1	9.2	11.0	12.9
	AST109-109-01-01-01-00	3.91	4.46	45.6	42.5	40.8	38.9	36.9	36.7	36.3	35.3	27.7	27.6	26.8	-	22.9	21.5	-	-	6.2	9.2	11.0	12.9
	AST109-109-01-00-03-01	4.41	4.96	46.1	44.2	42.5	40.3	41.5	40.5	39.2	37.0	32.6	31.1	28.4	25.7	26.2	20.8	-	-	6.9	10.9	13.2	15.6
	AST109-109-01-01-01-01	4.41	4.96	46.1	44.2	42.5	40.3	41.5	40.5	39.2	37.0	32.6	31.1	28.4	25.7	26.2	20.8	-	-	7.0	10.9	13.2	15.6
	AST109-109-01-00-04-00	4.91	5.46	43.8	40.0	37.7	35.5	36.5	36.4	35.4	33.5	27.5	27.3	25.9	-	22.8	20.1	-	-	7.8	12.6	15.4	18.2
	AST109-109-01-02-00-00	4.91	5.46	43.8	40.0	37.7	35.5	36.5	36.4	35.4	33.5	27.5	27.3	25.9	-	22.8	20.1	-	-	7.9	12.6	15.4	18.2
	AST109-109-01-00-04-01	5.41	5.96	42.8	39.9	37.3	34.0	41.4	39.8	37.9	34.6	32.5	30.3	26.2	22.2	25.8	19.3	-	-	8.7	14.5	18.0	21.5
	AST109-109-01-02-00-01	5.41	5.96	42.8	39.9	37.3	34.0	41.4	39.8	37.9	34.6	32.5	30.3	26.2	22.2	25.8	19.3	-	-	8.7	14.5	18.0	21.5
	AST109-109-01-00-05-00	5.91	6.46	41.9	37.4	34.7	32.0	36.2	36.0	34.6	31.8	27.3	27.1	24.9	-	22.6	18.6	-	-	9.7	16.5	20.6	24.7
	AST109-109-01-02-01-00	5.91	6.46	41.9	37.4	34.7	32.0	36.2	36.0	34.6	31.8	27.3	27.1	24.9	-	22.6	18.6	-	-	9.7	16.5	20.6	24.7
F_H=0.60 kN	AST109-109-01-00-00-01	1.41	1.96	51.8	51.8	51.8	51.8	40.6	40.7	40.7	40.7	31.5	31.5	31.6	30.5	25.2	22.0	20.1	18.2	3.4	4.0	4.4	4.7
	AST109-109-01-00-01-00	1.91	2.46	44.9	42.5	41.2	39.7	35.6	35.4	35.4	35.3	26.3	26.2	26.2	26.1	21.5	21.3	19.1	17.0	4.5	5.4	5.9	6.5
	AST109-109-01-00-01-01	2.41	2.96	51.8	51.8	51.8	51.8	40.6	40.7	40.7	40.7	31.5	31.5	31.6	30.5	25.2	22.0	20.1	18.2	5.3	6.6	7.4	8.2
	AST109-109-01-00-02-00	2.91	3.46	44.9	42.5	41.2	39.7	35.6	35.4	35.4	35.3	26.3	26.2	26.2	26.1	21.5	21.3	19.1	17.0	6.3	8.1	9.2	10.3
	AST109-109-01-01-00-00	2.91	3.46	44.9	42.5	41.2	39.7	35.6	35.4	35.4	35.3	26.3	26.2	26.2	26.1	21.5	21.3	19.1	17.0	6.3	8.1	9.2	10.3
	AST109-109-01-00-02-01	3.41	3.96	48.0	47.0	46.1	45.0	40.5	39.6	38.9	37.8	31.4	30.4	29.1	-	24.7	-	-	-	7.3	9.8	11.2	12.7
	AST109-109-01-01-00-01	3.41	3.96	48.0	47.0	46.1	45.0	40.5	39.6	38.9	37.8	31.4	30.4	29.1	-	24.7	-	-	-	7.4	9.8	11.3	12.7
	AST109-109-01-00-03-00	3.91	4.46	43.1	40.0	38.2	36.3	35.2	35.0	34.3	33.4	26.1	26.0	-	-	21.3	-	-	-	8.5	11.5	13.4	15.2
	AST109-109-01-01-01-00	3.91	4.46	43.1	40.0	38.2	36.3	35.2	35.0	34.3	33.4	26.1	26.0	-	-	21.3	-	-	-	8.5	11.5	13.4	15.2
	AST109-109-01-00-03-01	4.41	4.96	44.2	42.2	40.4	38.2	40.3	38.4	37.1	34.9	31.4	29.2	26.5	-	24.3	-	-	-	9.6	13.5	15.8	18.2
	AST109-109-01-01-01-01	4.41	4.96	44.2	42.2	40.4	38.2	40.3	38.4	37.1	34.9	31.4	29.2	26.5	-	24.3	-	-	-	9.6	13.5	15.9	18.2
	AST109-109-01-00-04-00	4.91	5.46	41.3	37.5	35.3	33.0	34.9	34.7	33.2	31.4	25.9	25.7	-	-	21.2	-	-	-	10.8	15.5	18.3	21.2
	AST109-109-01-02-00-00	4.91	5.46	41.3	37.5	35.3	33.0	34.9	34.7	33.2	31.4	25.9	25.7	-	-	21.2	-	-	-	10.8	15.5	18.4	21.2
	AST109-109-01-00-04-01	5.41	5.96	40.4	37.4	34.7	31.4	40.2	37.3	35.3	32.0	31.3	28.1	24.0	-	23.8	-	-	-	12.0	17.8	21.3	24.8
	AST109-109-01-02-00-01	5.41	5.96	40.4	37.4	34.7	31.4	40.2	37.3	35.3	32.0	31.3	28.1	24.0	-	23.8	-	-	-	12.0	17.8	21.3	24.8
	AST109-109-01-00-05-00	5.91	6.46	39.5	35.0	32.3	29.6	34.5	34.3	32.1	29.5	25.7	25.5	-	-	21.0	-	-	-	13.3	20.1	24.2	28.3
	AST109-109-01-02-01-00	5.91	6.46	39.5	35.0	32.3	29.6	34.5	34.3	32.1	29.5	25.7	25.5	-	-	21.0	-	-	-	13.3	20.1	24.2	28.3

4.3. Free AST109-157 tower

As a result of the numerical analyses carried out the values of the permissible load *Fv* acting on a single rack of the AST109-157 tower as well as the values of the minimum required load acting on a single rack *Fv min* to prevent the tower from tipping over were determined. When the value of the permissible load *Fv* was lower than the value of the minimum required load of a single rack *Fv min* to prevent the tower from tipping over the result was rejected and no interpolation was made. The results are summarized in Tab. 4.2. In addition, examples of graphical summary of the results in the form of graphs with different levels of wind load, different levels of horizontal force *FH* and different levels of base protrusion Sc for towers with a height of 2.96 m (Fig. 4.4) and 6.46 m (Fig. 4.5) are presented).

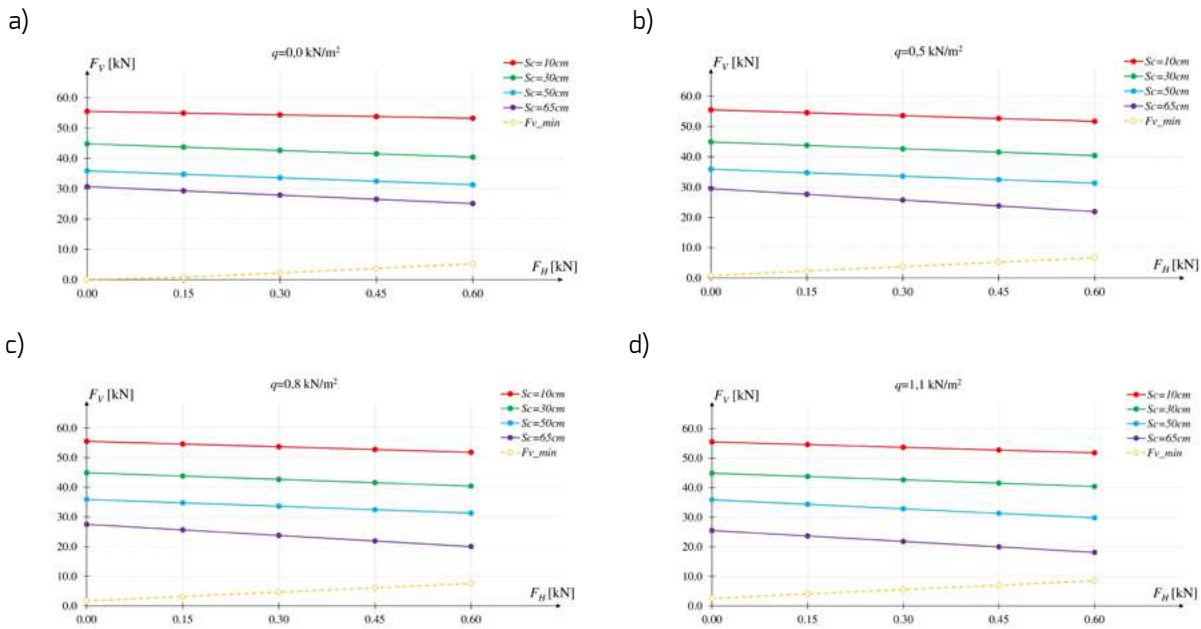

Fig. 4.4
Permissible load of a single rack of the AST109-157-01-00-01-01 tower (Hmax=2.96 m) with different wind load:
a) q=0.0 kN/m² / b) q=0.5 kN/m² / c) q=0.8 kN/m² / d) q=1.1 kN/m²

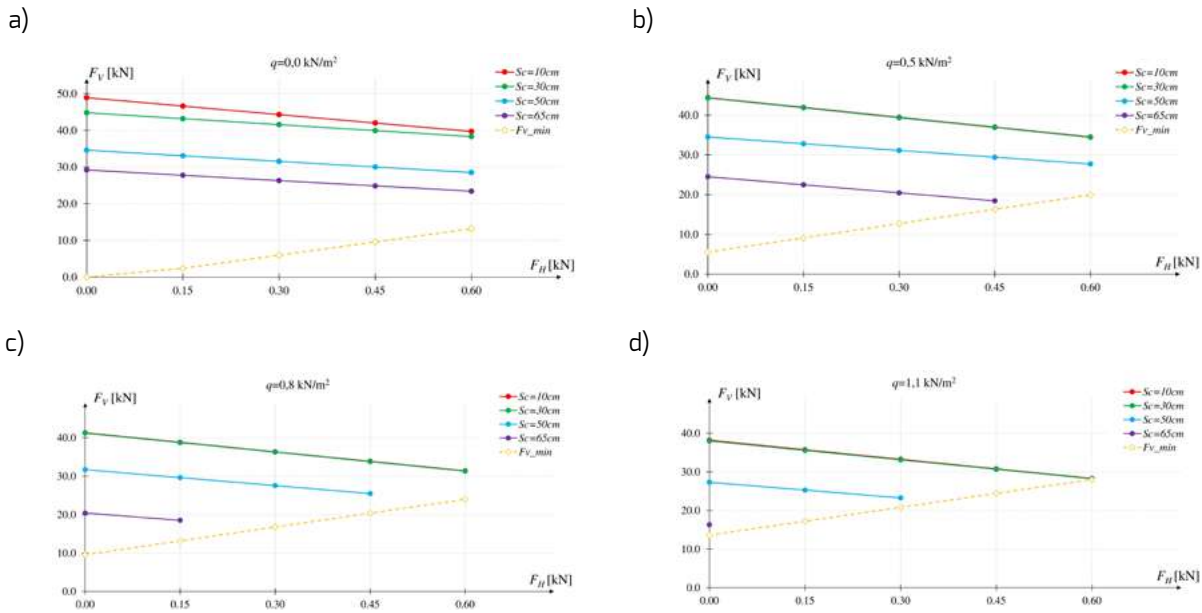

Fig. 4.5
Permissible load of a single rack of the AST109-157-01-02-01-00 tower (Hmax=6.46 m) with different wind load:
a) q=0.0 kN/m² / b) q=0.5 kN/m² / c) q=0.8 kN/m² / d) q=1.1 kN/m²

Tab. 4.2 Permissible characteristic (actually occurring on site) loads of free AST109-157 towers

FREE TOWER				AST109-157																Minimum required load of a single rack to prevent the tower from tipping over *Fv min* (kN)			
				Permissible load *Fv* per single tower rack (kN)																			
Horizontal load	Tower name	H_{min} (m)	H_{max} (m)	*Sintegr.* =10 cm (*Sp*=6 cm; *Sg*=4 cm)				*Sintegr.* =30 cm (*Sp*=18 cm; *Sg*=12 cm)				*Sintegr.* =50 cm (*Sp*=30 cm; *Sg*=20 cm)				*Sintegr.* =65 cm (*Sp*=40 cm; *Sg*=25 cm)							
				Wind pressure *q* (kN/m²)				Wind pressure *q* (kN/m²)/				Wind pressure *q* (kN/m²)				Wind pressure *q* (kN/m²)				Wind pressure *q* (kN/m²)			
				0.0	0.5	0.8	1.1	0.0	0.5	0.8	1.1	0.0	0.5	0.8	1.1	0.0	0.5	0.8	1.1	0.0	0.5	0.8	1.1
FH=0.0 kN	AST109-157-01-00-00-01	1.41	1.96	55.5	55.5	55.5	55.5	44.8	44.9	44.9	44.9	35.9	35.9	35.9	35.9	30.7	29.5	27.5	25.5	0.0	0.2	0.6	1.1
	AST109-157-01-00-01-00	1.91	2.46	56.4	53.6	52.0	50.4	45.6	45.5	45.4	45.3	35.1	35.0	35.0	34.9	29.6	28.9	26.2	23.5	0.0	0.4	1.0	1.6
	AST109-157-01-00-01-01	2.41	2.96	55.5	55.5	55.5	55.5	44.8	44.9	44.9	44.9	35.9	35.9	35.9	35.9	30.7	29.5	27.5	25.5	0.0	0.8	1.7	2.6
	AST109-157-01-00-02-00	2.91	3.46	56.4	53.6	52.0	50.4	45.6	45.5	45.4	45.3	35.1	35.0	35.0	34.9	29.6	28.9	26.2	23.5	0.0	1.1	2.2	3.4
	AST109-157-01-01-00-00	2.91	3.46	56.4	53.6	52.0	50.4	45.6	45.5	45.4	45.3	35.1	35.0	35.0	34.9	29.6	28.9	26.2	23.5	0.0	1.1	2.3	3.4
	AST109-157-01-00-02-01	3.41	3.96	53.9	52.7	51.8	50.5	44.8	44.8	44.8	43.6	35.9	35.9	34.9	33.5	30.7	28.1	25.4	22.8	0.0	1.7	3.3	4.8
	AST109-157-01-01-00-01	3.41	3.96	53.9	52.7	51.8	50.5	44.8	44.8	44.8	43.6	35.9	35.9	34.9	33.5	30.7	28.1	25.4	22.8	0.0	1.7	3.3	4.9
	AST109-157-01-00-03-00	3.91	4.46	53.9	50.5	48.4	46.3	45.3	45.1	44.0	42.9	34.9	34.8	33.9	32.4	29.5	27.4	24.3	21.1	0.0	2.2	4.1	5.9
	AST109-157-01-01-01-00	3.91	4.46	53.9	50.5	48.4	46.3	45.3	45.1	44.0	42.9	34.9	34.8	33.9	32.4	29.5	27.4	24.3	21.1	0.0	2.2	4.1	5.9
	AST109-157-01-00-03-01	4.41	4.96	52.3	50.0	48.0	45.4	44.7	44.8	44.8	42.3	35.8	35.8	33.9	31.1	30.7	26.6	23.4	20.1	0.0	3.0	5.5	7.9
	AST109-157-01-01-01-01	4.41	4.96	52.3	50.0	48.0	45.4	44.7	44.8	44.8	42.3	35.8	35.8	33.9	31.1	30.7	26.6	23.4	20.1	0.0	3.1	5.5	7.9
	AST109-157-01-00-04-00	4.91	5.46	51.4	47.5	44.9	42.3	45.1	44.7	42.6	40.4	34.8	34.7	32.8	29.8	29.3	26.0	22.3	18.7	0.0	3.7	6.5	9.3
	AST109-157-01-02-00-00	4.91	5.46	51.4	47.5	44.9	42.3	45.1	44.7	42.6	40.4	34.8	34.7	32.8	29.8	29.3	26.0	22.3	18.7	0.0	3.7	6.5	9.3
	AST109-157-01-00-04-01	5.41	5.96	50.7	47.2	44.3	40.4	44.7	44.7	44.7	41.0	35.8	35.8	32.9	28.7	30.7	25.2	21.3	17.4	0.0	4.8	8.3	11.9
	AST109-157-01-02-00-01	5.41	5.96	50.7	47.2	44.3	40.4	44.7	44.7	44.7	41.0	35.8	35.8	32.9	28.7	30.7	25.2	21.3	17.4	0.0	4.8	8.3	11.9
	AST109-157-01-00-05-00	5.91	6.46	48.9	44.4	41.3	38.2	44.8	44.3	41.2	38.0	34.6	34.5	31.7	27.3	29.2	24.5	20.4	16.3	0.0	5.5	9.6	13.6
	AST109-157-01-02-01-00	5.91	6.46	48.9	44.4	41.3	38.2	44.8	44.3	41.2	38.0	34.6	34.5	31.7	27.3	29.2	24.5	20.4	16.3	0.0	5.5	9.6	13.6
FH=0.15 kN	AST109-157-01-00-00-01	1.41	1.96	54.9	54.6	54.6	54.6	43.7	43.8	43.8	43.8	34.8	34.8	34.8	34.4	29.3	27.6	25.6	23.7	0.5	1.2	1.6	2.0
	AST109-157-01-00-01-00	1.91	2.46	53.7	50.9	49.3	47.7	44.0	43.9	43.8	43.7	33.6	33.5	33.5	33.3	28.2	27.0	24.3	21.6	0.7	1.7	2.3	2.9
	AST109-157-01-00-01-01	2.41	2.96	54.9	54.6	54.6	54.6	43.7	43.8	43.8	43.8	34.8	34.8	34.8	34.4	29.3	27.6	25.6	23.7	0.8	2.3	3.1	4.0
	AST109-157-01-00-02-00	2.91	3.46	53.7	50.9	49.3	47.7	44.0	43.9	43.8	43.7	33.6	33.5	33.5	33.3	28.2	27.0	24.3	21.6	1.0	2.9	4.0	5.1
	AST109-157-01-01-00-00	2.91	3.46	53.7	50.9	49.3	47.7	44.0	43.9	43.8	43.7	33.6	33.5	33.5	33.3	28.2	27.0	24.3	21.6	1.0	2.9	4.0	5.1
	AST109-157-01-00-02-01	3.41	3.96	52.7	51.3	50.3	49.0	43.7	43.5	43.2	42.0	34.7	34.5	33.4	31.8	29.2	26.2	23.6	20.9	1.2	3.8	5.3	6.9
	AST109-157-01-01-00-01	3.41	3.96	52.7	51.3	50.3	49.0	43.7	43.5	43.2	42.0	34.7	34.5	33.4	31.8	29.2	26.2	23.6	20.9	1.2	3.8	5.3	6.9
	AST109-157-01-00-03-00	3.91	4.46	51.4	47.9	45.8	43.7	43.7	43.2	42.1	41.0	33.4	33.3	32.2	30.6	28.0	25.5	22.3	-	1.4	4.5	6.4	8.3
	AST109-157-01-01-01-00	3.91	4.46	51.4	47.9	45.8	43.7	43.7	43.2	42.1	41.0	33.4	33.3	32.2	30.6	28.0	25.5	22.3	-	1.4	4.5	6.4	8.3
	AST109-157-01-00-03-01	4.41	4.96	50.4	48.0	45.9	43.3	43.6	43.1	42.6	40.1	34.7	34.3	32.1	29.2	29.1	24.7	21.5	18.2	1.6	5.7	8.1	10.6
	AST109-157-01-01-01-01	4.41	4.96	50.4	48.0	45.9	43.3	43.6	43.1	42.6	40.1	34.7	34.3	32.1	29.2	29.1	24.7	21.5	18.2	1.6	5.7	8.1	10.6
	AST109-157-01-00-04-00	4.91	5.46	49.0	44.9	42.3	39.7	43.4	42.5	40.4	38.3	33.2	33.0	30.9	28.0	27.9	24.0	20.4	-	1.9	6.6	9.4	12.3
	AST109-157-01-02-00-00	4.91	5.46	49.0	44.9	42.3	39.7	43.4	42.5	40.4	38.3	33.2	33.0	30.9	28.0	27.9	24.0	20.4	-	1.9	6.6	9.5	12.3
	AST109-157-01-00-04-01	5.41	5.96	48.2	44.7	41.6	37.7	43.6	42.8	42.1	38.3	34.7	34.0	30.8	26.7	29.0	23.3	19.4	15.5	2.1	8.0	11.6	15.1
	AST109-157-01-02-00-01	5.41	5.96	48.2	44.7	41.6	37.7	43.6	42.8	42.1	38.3	34.7	34.0	30.8	26.7	29.0	23.3	19.4	15.5	2.1	8.0	11.6	15.2
	AST109-157-01-00-05-00	5.91	6.46	46.6	41.9	38.8	35.7	43.2	41.8	38.7	35.6	33.1	32.8	29.6	25.3	27.8	22.5	18.5	-	2.4	9.1	13.2	17.2
	AST109-157-01-02-01-00	5.91	6.46	46.6	41.9	38.8	35.7	43.2	41.8	38.7	35.6	33.1	32.8	29.6	25.3	27.8	22.5	18.5	-	2.4	9.1	13.2	17.2

Tab. 4.2 cont.

FREE TOWER				AST109-157																Minimum required load of a single rack to prevent the tower from tipping over *Fv min* [kN]			
				Permissible load *Fv* per single tower rack [kN]																			
Horizontal load	Tower name	Hmin [m]	Hmax [m]	*Sintegr.* =10 cm (*Sp*=6 cm; *Sg*=4 cm)				*Sintegr.* =30 cm (*Sp*=18 cm; *Sg*=12 cm)				*Sintegr.* =50 cm (*Sp*=30 cm; *Sg*=20 cm)				*Sintegr.* =65 cm (*Sp*=40 cm; *Sg*=25 cm)							
				Wind pressure *q* [kN/m²]				Wind pressure *q* [kN/m²]/				Wind pressure *q* [kN/m²]				Wind pressure *q* [kN/m²]				Wind pressure *q* [kN/m²]			
				0.0	0.5	0.8	1.1	0.0	0.5	0.8	1.1	0.0	0.5	0.8	1.1	0.0	0.5	0.8	1.1	0.0	0.5	0.8	1.1
Ft=0.30 kN	AST109-157-01-00-00-01	1.41	1.96	54.4	53.6	53.7	53.7	42.6	42.7	42.7	42.7	33.6	33.6	33.6	32.9	27.9	25.7	23.8	21.8	1.4	2.1	2.6	3.0
	AST109-157-01-00-01-00	1.91	2.46	51.1	48.3	46.7	45.1	42.4	42.3	42.2	42.1	32.1	32.0	31.9	31.7	26.7	25.0	22.3	19.7	1.9	2.9	3.5	4.1
	AST109-157-01-00-01-01	2.41	2.96	54.4	53.6	53.7	53.7	42.6	42.7	42.7	42.7	33.6	33.6	33.6	32.9	27.9	25.7	23.8	21.8	2.3	3.7	4.6	5.5
	AST109-157-01-00-02-00	2.91	3.46	51.1	48.3	46.7	45.1	42.4	42.3	42.2	42.1	32.1	32.0	31.9	31.7	26.7	25.0	22.3	19.7	2.8	4.6	5.8	6.9
	AST109-157-01-01-00-00	2.91	3.46	51.1	48.3	46.7	45.1	42.4	42.3	42.2	42.1	32.1	32.0	31.9	31.7	26.7	25.0	22.3	19.7	2.8	4.6	5.8	6.9
	AST109-157-01-00-02-01	3.41	3.96	51.5	49.8	48.7	47.5	42.6	42.1	41.6	40.3	33.6	33.1	32.0	30.1	27.7	24.3	21.7	-	3.2	5.8	7.4	8.9
	AST109-157-01-01-00-01	3.41	3.96	51.5	49.8	48.7	47.5	42.6	42.1	41.6	40.3	33.6	33.1	32.0	30.1	27.7	24.3	21.7	-	3.2	5.8	7.4	8.9
	AST109-157-01-00-03-00	3.91	4.46	48.8	45.3	43.2	41.1	42.1	41.3	40.2	39.1	31.9	31.7	30.5	28.9	26.6	23.5	-	-	3.8	6.9	8.7	10.6
	AST109-157-01-01-01-00	3.91	4.46	48.8	45.3	43.2	41.1	42.1	41.3	40.2	39.1	31.9	31.7	30.5	28.9	26.6	23.5	-	-	3.8	6.9	8.7	10.6
	AST109-157-01-00-03-01	4.41	4.96	48.6	46.0	43.8	41.3	42.5	41.5	40.5	38.0	33.5	32.7	30.3	27.4	27.5	22.8	19.6	-	4.2	8.3	10.7	13.2
	AST109-157-01-01-01-01	4.41	4.96	48.6	46.0	43.8	41.3	42.5	41.5	40.5	38.0	33.5	32.7	30.3	27.4	27.5	22.8	19.6	-	4.3	8.3	10.8	13.2
	AST109-157-01-00-04-00	4.91	5.46	46.6	42.4	39.8	37.2	41.8	40.3	38.2	36.1	31.7	31.4	29.0	26.1	26.4	22.0	-	-	4.8	9.5	12.4	15.2
	AST109-157-01-02-00-00	4.91	5.46	46.6	42.4	39.8	37.2	41.8	40.3	38.2	36.1	31.7	31.4	29.0	26.1	26.4	22.0	-	-	4.9	9.6	12.4	15.2
	AST109-157-01-00-04-01	5.41	5.96	45.7	42.2	38.9	35.1	42.5	40.9	39.4	35.7	33.5	32.2	28.7	24.6	27.4	21.4	17.5	-	5.3	11.3	14.9	18.4
	AST109-157-01-02-00-01	5.41	5.96	45.7	42.2	38.9	35.1	42.5	40.9	39.4	35.7	33.5	32.2	28.7	24.6	27.4	21.4	17.5	-	5.4	11.3	14.9	18.4
	AST109-157-01-00-05-00	5.91	6.46	44.3	39.5	36.4	33.3	41.6	39.4	36.3	33.1	31.6	31.1	27.6	23.3	26.3	20.5	-	-	6.0	12.7	16.8	20.8
	AST109-157-01-02-01-00	5.91	6.46	44.3	39.5	36.4	33.3	41.6	39.4	36.3	33.1	31.6	31.1	27.6	23.3	26.3	20.5	-	-	6.0	12.7	16.8	20.8
Ft=0.45 kN	AST109-157-01-00-00-01	1.41	1.96	53.8	52.7	52.7	52.7	41.5	41.5	41.5	41.5	32.5	32.5	32.5	31.3	26.5	23.8	21.9	20.0	2.4	3.1	3.6	4.0
	AST109-157-01-00-01-00	1.91	2.46	48.4	45.6	44.0	42.4	40.7	40.6	40.5	40.4	30.5	30.4	30.4	30.1	25.3	23.1	20.4	17.7	3.2	4.2	4.8	5.4
	AST109-157-01-00-01-01	2.41	2.96	53.8	52.7	52.7	52.7	41.5	41.5	41.5	41.5	32.5	32.5	32.5	31.3	26.5	23.8	21.9	20.0	3.7	5.2	6.1	7.0
	AST109-157-01-00-02-00	2.91	3.46	48.4	45.6	44.0	42.4	40.7	40.6	40.5	40.4	30.5	30.4	30.4	30.1	25.3	23.1	20.4	17.7	4.5	6.4	7.5	8.6
	AST109-157-01-01-00-00	2.91	3.46	48.4	45.6	44.0	42.4	40.7	40.6	40.5	40.4	30.5	30.4	30.4	30.1	25.3	23.1	20.4	17.7	4.5	6.4	7.5	8.6
	AST109-157-01-00-02-01	3.41	3.96	50.3	48.3	47.2	45.9	41.4	40.7	39.9	38.7	32.4	31.8	30.5	28.4	26.2	22.3	-	-	5.3	7.8	9.4	10.9
	AST109-157-01-01-00-01	3.41	3.96	50.3	48.3	47.2	45.9	41.4	40.7	39.9	38.7	32.4	31.8	30.5	28.4	26.2	22.3	-	-	5.3	7.9	9.4	11.0
	AST109-157-01-00-03-00	3.91	4.46	46.3	42.7	40.6	38.5	40.5	39.4	38.3	37.2	30.4	30.1	28.7	-	25.1	21.5	-	-	6.1	9.2	11.1	12.9
	AST109-157-01-01-01-00	3.91	4.46	46.3	42.7	40.6	38.5	40.5	39.4	38.3	37.2	30.4	30.1	28.7	-	25.1	21.5	-	-	6.1	9.2	11.1	12.9
	AST109-157-01-00-03-01	4.41	4.96	46.7	44.0	41.7	39.2	41.4	39.8	38.3	35.8	32.4	31.1	28.6	25.5	26.0	20.9	-	-	6.9	10.9	13.4	15.8
	AST109-157-01-01-01-01	4.41	4.96	46.7	44.0	41.7	39.2	41.4	39.8	38.3	35.8	32.4	31.1	28.6	25.5	26.0	20.9	-	-	6.9	11.0	13.4	15.8
	AST109-157-01-00-04-00	4.91	5.46	44.1	39.8	37.2	34.6	40.2	38.1	36.0	33.9	30.2	29.7	27.1	-	25.0	20.0	-	-	7.8	12.5	15.3	18.1
	AST109-157-01-02-00-00	4.91	5.46	44.1	39.8	37.2	34.6	40.2	38.1	36.0	33.9	30.2	29.7	27.1	-	25.0	20.0	-	-	7.8	12.5	15.3	18.2
	AST109-157-01-00-04-01	5.41	5.96	43.2	39.7	36.2	32.4	41.3	39.0	36.8	33.0	32.4	30.4	26.6	22.6	25.7	19.4	-	-	8.6	14.6	18.1	21.7
	AST109-157-01-02-00-01	5.41	5.96	43.2	39.7	36.2	32.4	41.3	39.0	36.8	33.0	32.4	30.4	26.6	22.6	25.7	19.4	-	-	8.6	14.6	18.1	21.7
	AST109-157-01-00-05-00	5.91	6.46	42.0	37.0	33.9	30.8	39.9	36.9	33.8	30.7	30.0	29.4	25.5	-	24.9	18.4	-	-	9.6	16.3	20.4	24.4
	AST109-157-01-02-01-00	5.91	6.46	42.0	37.0	33.9	30.8	39.9	36.9	33.8	30.7	30.0	29.4	25.5	-	24.9	18.4	-	-	9.6	16.4	20.4	24.4
Ft=0.60 kN	AST109-157-01-00-00-01	1.41	1.96	53.2	51.7	51.8	51.8	40.4	40.4	40.4	40.4	31.3	31.3	31.3	29.8	25.1	21.9	20.0	18.1	3.4	4.1	4.5	5.0
	AST109-157-01-00-01-00	1.91	2.46	45.7	42.9	41.3	39.7	39.1	39.0	38.9	38.8	29.0	28.9	28.8	28.5	23.8	21.1	18.4	15.8	4.4	5.4	6.0	6.6
	AST109-157-01-00-01-01	2.41	2.96	53.2	51.7	51.8	51.8	40.4	40.4	40.4	40.4	31.3	31.3	31.3	29.8	25.1	21.9	20.0	18.1	5.2	6.7	7.6	8.5
	AST109-157-01-00-02-00	2.91	3.46	45.7	42.9	41.3	39.7	39.1	39.0	38.9	38.8	29.0	28.9	28.8	28.5	23.8	21.1	18.4	15.8	6.3	8.1	9.3	10.4
	AST109-157-01-01-00-00	2.91	3.46	45.7	42.9	41.3	39.7	39.1	39.0	38.9	38.8	29.0	28.9	28.8	28.5	23.8	21.1	18.4	15.8	6.3	8.1	9.3	10.4
	AST109-157-01-00-02-01	3.41	3.96	49.0	46.9	45.7	44.4	40.3	39.3	38.3	37.0	31.3	30.4	29.0	-	24.7	-	-	-	7.3	9.9	11.4	13.0
	AST109-157-01-01-00-01	3.41	3.96	49.0	46.9	45.7	44.4	40.3	39.3	38.3	37.0	31.3	30.4	29.0	-	24.7	-	-	-	7.3	9.9	11.4	13.0
	AST109-157-01-00-03-00	3.91	4.46	43.7	40.1	38.0	35.9	38.8	37.5	36.4	35.3	28.8	28.5	-	-	23.7	-	-	-	8.4	11.5	13.4	15.2
	AST109-157-01-01-01-00	3.91	4.46	43.7	40.1	38.0	35.9	38.8	37.5	36.4	35.3	28.8	28.5	-	-	23.7	-	-	-	8.4	11.5	13.4	15.3
	AST109-157-01-00-03-01	4.41	4.96	44.9	42.0	39.6	37.1	40.3	38.2	36.2	33.7	31.2	29.5	26.8	-	24.4	-	-	-	9.5	13.6	16.0	18.4
	AST109-157-01-01-01-01	4.41	4.96	44.9	42.0	39.6	37.1	40.3	38.2	36.2	33.7	31.2	29.5	26.8	-	24.4	-	-	-	9.5	13.6	16.0	18.5
	AST109-157-01-00-04-00	4.91	5.46	41.7	37.3	34.7	32.1	38.6	35.9	33.8	31.7	28.7	28.1	-	-	23.5	-	-	-	10.7	15.4	18.3	21.1
	AST109-157-01-02-00-00	4.91	5.46	41.7	37.3	34.7	32.1	38.6	35.9	33.8	31.7	28.7	28.1	-	-	23.5	-	-	-	10.7	15.5	18.3	21.1
	AST109-157-01-00-04-01	5.41	5.96	40.7	37.2	33.5	29.7	40.2	37.1	34.1	30.3	31.2	28.6	24.5	-	24.0	-	-	-	11.9	17.8	21.4	25.0
	AST109-157-01-02-00-01	5.41	5.96	40.7	37.2	33.5	29.7	40.2	37.1	34.1	30.3	31.2	28.6	24.5	-	24.0	-	-	-	11.9	17.9	21.4	25.0
	AST109-157-01-00-05-00	5.91	6.46	39.7	34.5	31.4	28.3	38.3	34.4	31.3	28.2	28.5	27.7	-	-	23.4	-	-	-	13.2	19.9	24.0	28.0
	AST109-157-01-02-01-00	5.91	6.46	39.7	34.5	31.4	28.3	38.3	34.4	31.3	28.2	28.5	27.7	-	-	23.4	-	-	-	13.2	20.0	24.0	28.1

4.4 Free AST109-207 tower

As a result of the numerical analyses carried out the values of the permissible load *Fv* acting on a single rack of the AST109-207 tower as well as the values of the minimum required load acting on a single rack *Fv min* to prevent the tower from tipping over were determined. When the value of the permissible load Fv was lower than the value of the minimum required load of a single rack *Fv min* to prevent the tower from tipping over the result was rejected and no interpolation was made. The results are summarized in Tab. 4.3. In addition, examples of graphical summary of the results in the form of graphs with different levels of wind load, different levels of horizontal force *FH* and different levels of base protrusion Sc for towers with a height of 2.96 m (Fig. 4.6) and 6.46 m (Fig. 4.7) are presented.

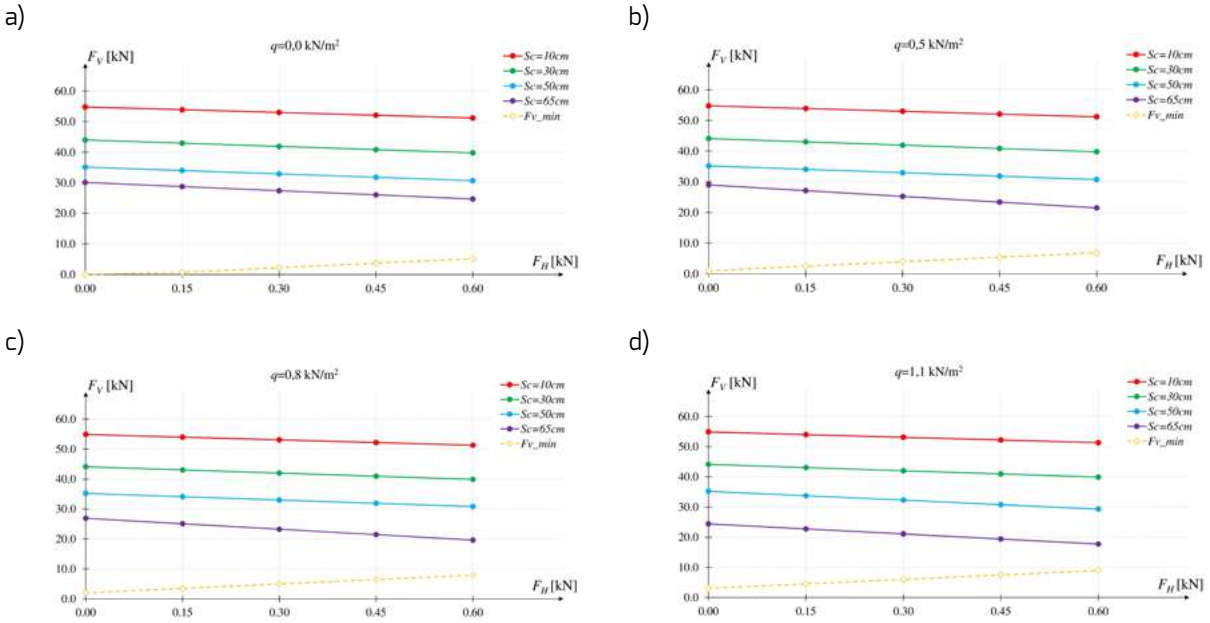

Fig. 4.6

Permissible load of a single rack of the AST109-207-01-00-01-01 tower (Hmax=2.96 m) with different wind load:
a) q=0.0 kN/m² / b) q=0.5 kN/m² / c) q=0.8 kN/m² / d) q=1.1 kN/m²

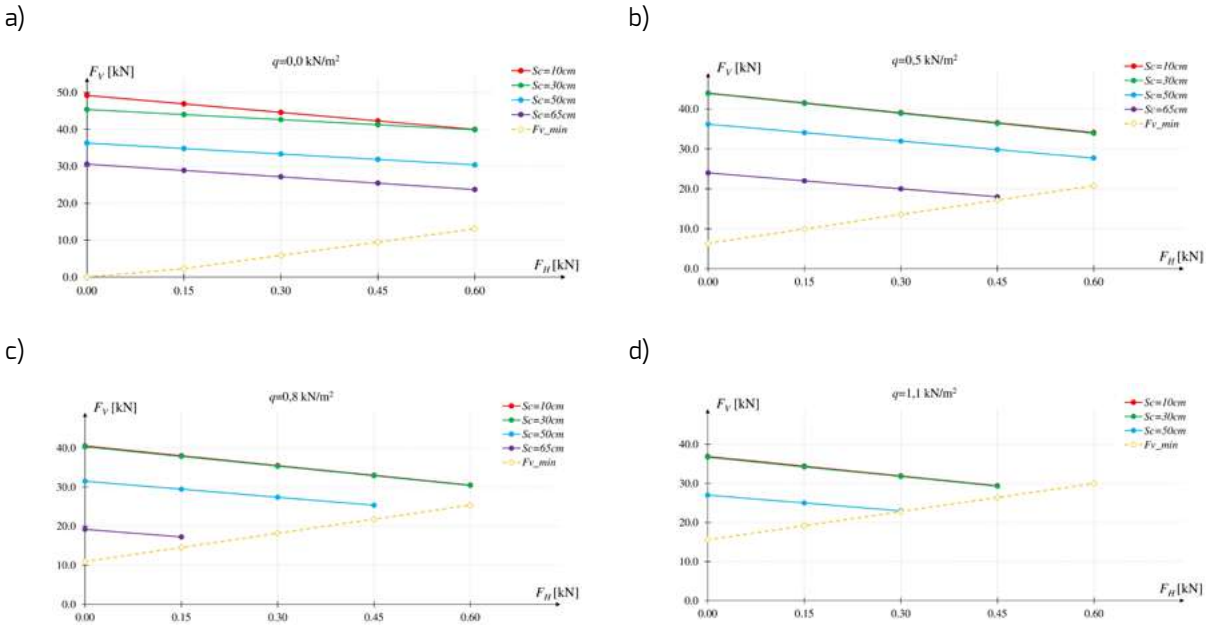

Fig. 4.7

Permissible load of a single rack of the AST109-207-01-02-01-00 tower (Hmax=6.46 m) with different wind load:
a) q=0.0 kN/m² / b) q=0.5 kN/m² / c) q=0.8 kN/m² / d) q=1.1 kN/m²

Tab. 4.3 Permissible characteristic (actually occurring on site) loads of free AST109-207 towers

FREE TOWER				AST109-207																Minimum required load of a single rack to prevent the tower from tipping over *Fv min* [kN]			
				Permissible load *Fv* per single tower rack [kN]																			
Horizonta load	Tower name	H_{min} [m]	H_{max} [m]	*Sintegr.* =10 cm (*Sp*=6 cm; *Sg*=4 cm)				*Sintegr.* =30 cm (*Sp*=18 cm; *Sg*=12 cm)				*Sintegr.* =50 cm (*Sp*=30 cm; *Sg*=20 cm)				*Sintegr.* =65 cm (*Sp*=40 cm; *Sg*=25 cm)							
				Wind pressure *q* [kN/m²]				Wind pressure *q* [kN/m²]/				Wind pressure *q* [kN/m²]				Wind pressure *q* [kN/m²]				Wind pressure *q* [kN/m²]			
				0.0	0.5	0.8	1.1	0.0	0.5	0.8	1.1	0.0	0.5	0.8	1.1	0.0	0.5	0.8	1.1	0.0	0.5	0.8	1.1
F_H=0.0 kN	AST109-207-01-00-00-01	1.41	1.96	54.8	54.8	54.9	54.9	44.0	44.1	44.1	44.1	35.1	35.2	35.2	35.2	30.1	29.0	26.9	24.4	0.0	0.3	0.8	1.3
	AST109-207-01-00-01-00	1.91	2.46	56.5	54.1	52.2	50.3	45.5	45.5	45.5	45.5	36.3	36.3	36.3	36.1	30.9	28.4	26.2	23.5	0.0	0.5	1.2	1.9
	AST109-207-01-00-01-01	2.41	2.96	54.8	54.8	54.9	54.9	44.0	44.1	44.1	44.1	35.1	35.2	35.2	35.2	30.1	29.0	26.9	24.4	0.0	1.0	2.0	3.0
	AST109-207-01-00-02-00	2.91	3.46	56.5	54.1	52.2	50.3	45.5	45.5	45.5	45.5	36.3	36.3	36.3	36.1	30.9	28.4	26.2	23.5	0.0	1.3	2.6	3.9
	AST109-207-01-01-00-00	2.91	3.46	56.5	54.1	52.2	50.3	45.5	45.5	45.5	45.5	36.3	36.3	36.3	36.1	30.9	28.4	26.2	23.5	0.0	1.3	2.6	3.9
	AST109-207-01-00-02-01	3.41	3.96	53.6	52.2	51.0	49.5	44.0	44.0	44.0	42.5	35.1	35.2	34.3	32.9	30.1	27.5	24.6	21.4	0.0	2.1	3.9	5.7
	AST109-207-01-01-00-01	3.41	3.96	53.6	52.2	51.0	49.5	44.0	44.0	44.0	42.5	35.1	35.2	34.3	32.9	30.1	27.5	24.6	21.4	0.0	2.1	3.9	5.7
	AST109-207-01-00-03-00	3.91	4.46	54.1	50.7	48.3	45.8	45.5	45.0	43.8	42.6	36.3	36.3	34.7	33.1	30.8	26.9	23.9	-	0.0	2.6	4.7	6.8
	AST109-207-01-01-01-00	3.91	4.46	54.1	50.7	48.3	45.8	45.5	45.0	43.8	42.6	36.3	36.3	34.7	33.1	30.8	26.9	23.9	-	0.0	2.6	4.7	6.8
	AST109-207-01-00-03-01	4.41	4.96	52.4	49.7	47.0	44.0	43.9	44.0	43.8	40.8	35.0	35.1	33.4	30.6	30.0	26.0	22.2	18.3	0.0	3.6	6.4	9.2
	AST109-207-01-01-01-01	4.41	4.96	52.4	49.7	47.0	44.0	43.9	44.0	43.8	40.8	35.0	35.1	33.4	30.6	30.0	26.0	22.2	18.3	0.0	3.6	6.4	9.2
	AST109-207-01-00-04-00	4.91	5.46	51.6	47.4	44.4	41.4	45.4	44.4	42.0	39.6	36.3	36.2	33.1	30.0	30.7	25.5	21.5	-	0.0	4.2	7.4	10.7
	AST109-207-01-02-00-00	4.91	5.46	51.6	47.4	44.4	41.4	45.4	44.4	42.0	39.6	36.3	36.2	33.1	30.0	30.7	25.5	21.5	-	0.0	4.2	7.5	10.7
	AST109-207-01-00-04-01	5.41	5.96	51.2	47.1	43.1	38.6	43.9	43.9	43.7	39.2	35.0	35.1	32.5	28.3	30.0	24.5	19.9	15.3	0.0	5.6	9.7	13.8
	AST109-207-01-02-00-01	5.41	5.96	51.2	47.1	43.1	38.6	43.9	43.9	43.7	39.2	35.0	35.1	32.5	28.3	30.0	24.5	19.9	15.3	0.0	5.6	9.7	13.8
	AST109-207-01-00-05-00	5.91	6.46	49.2	44.0	40.5	36.9	45.4	43.9	40.3	36.7	36.3	36.2	31.5	27.0	30.6	24.0	19.2	-	0.0	6.4	11.0	15.6
	AST109-207-01-02-01-00	5.91	6.46	49.2	44.0	40.5	36.9	45.4	43.9	40.3	36.7	36.3	36.2	31.5	27.0	30.6	24.0	19.2	-	0.0	6.4	11.0	15.6
F_H=0.15 kN	AST109-207-01-00-00-01	1.41	1.96	53.9	53.9	54.0	54.0	43.0	43.0	43.1	43.1	34.0	34.1	34.1	33.7	28.8	27.1	25.1	22.7	0.4	1.3	1.8	2.3
	AST109-207-01-00-01-00	1.91	2.46	54.0	51.4	49.5	47.6	44.5	44.4	44.4	44.1	34.9	34.9	34.8	34.1	29.3	26.5	24.3	21.6	0.6	1.8	2.5	3.1
	AST109-207-01-00-01-01	2.41	2.96	53.9	53.9	54.0	54.0	43.0	43.0	43.1	43.1	34.0	34.1	34.1	33.7	28.8	27.1	25.1	22.7	0.7	2.4	3.5	4.5
	AST109-207-01-00-02-00	2.91	3.46	54.0	51.4	49.5	47.6	44.5	44.4	44.4	44.1	34.9	34.9	34.8	34.1	29.3	26.5	24.3	21.6	1.0	3.1	4.4	5.6
	AST109-207-01-01-00-00	2.91	3.46	54.0	51.4	49.5	47.6	44.5	44.4	44.4	44.1	34.9	34.9	34.8	34.1	29.3	26.5	24.3	21.6	1.0	3.1	4.4	5.6
	AST109-207-01-00-02-01	3.41	3.96	52.2	50.8	49.5	48.0	42.9	42.7	42.4	40.9	34.0	33.9	32.9	31.2	28.7	25.6	22.7	-	1.1	4.1	5.9	7.7
	AST109-207-01-01-00-01	3.41	3.96	52.2	50.8	49.5	48.0	42.9	42.7	42.4	40.9	34.0	33.9	32.9	31.2	28.7	25.6	22.7	-	1.1	4.1	5.9	7.7
	AST109-207-01-00-03-00	3.91	4.46	51.6	48.1	45.7	43.2	44.3	43.4	42.2	40.8	34.9	34.6	33.0	31.0	29.2	25.0	21.9	-	1.4	4.9	7.0	9.1
	AST109-207-01-01-01-00	3.91	4.46	51.6	48.1	45.7	43.2	44.3	43.4	42.2	40.8	34.9	34.6	33.0	31.0	29.2	25.0	21.9	-	1.4	4.9	7.0	9.1
	AST109-207-01-00-03-01	4.41	4.96	50.4	47.7	44.9	41.9	42.9	42.4	41.7	38.7	33.9	33.6	31.7	28.7	28.6	24.0	20.3	-	1.5	6.2	9.0	11.9
	AST109-207-01-01-01-01	4.41	4.96	50.4	47.7	44.9	41.9	42.9	42.4	41.7	38.7	33.9	33.6	31.7	28.7	28.6	24.0	20.3	-	1.5	6.2	9.1	11.9
	AST109-207-01-00-04-00	4.91	5.46	49.3	44.8	41.8	38.8	44.2	42.4	40.0	37.5	34.9	34.3	31.2	28.0	29.0	23.5	19.6	-	1.8	7.2	10.4	13.6
	AST109-207-01-02-00-00	4.91	5.46	49.3	44.8	41.8	38.8	44.2	42.4	40.0	37.5	34.9	34.3	31.2	28.0	29.0	23.5	19.6	-	1.8	7.2	10.4	13.6
	AST109-207-01-00-04-01	5.41	5.96	48.7	44.5	40.4	35.9	42.9	42.2	41.0	36.5	33.9	33.4	30.5	26.3	28.5	22.5	17.9	-	2.0	8.8	12.9	17.0
	AST109-207-01-02-00-01	5.41	5.96	48.7	44.5	40.4	35.9	42.9	42.2	41.0	36.5	33.9	33.4	30.5	26.3	28.5	22.5	17.9	-	2.0	8.9	13.0	17.1
	AST109-207-01-00-05-00	5.91	6.46	46.9	41.5	38.0	34.4	44.0	41.4	37.8	34.2	34.8	34.1	29.5	25.0	28.9	22.0	17.2	-	2.3	10.0	14.6	19.2
	AST109-207-01-02-01-00	5.91	6.46	46.9	41.5	38.0	34.4	44.0	41.4	37.8	34.2	34.8	34.1	29.5	25.0	28.9	22.0	17.2	-	2.3	10.0	14.6	19.2

Tab. 4.3 cont.

FREE TOWER				AST109-207																Minimum required load of a single rack to prevent the tower from tipping over *Fv min* (kN)			
				Permissible load *Fv* per single tower rack (kN)																			
Horizontal load	Tower name	Hmin (m)	Hmax (m)	*Sintegr.* =10 cm (*Sp*=6 cm; *Sg*=4 cm)				*Sintegr.* =30 cm (*Sp*=18 cm; *Sg*=12 cm)				*Sintegr.* =50 cm (*Sp*=30 cm; *Sg*=20 cm)				*Sintegr.* =65 cm (*Sp*=40 cm; *Sg*=25 cm)							
				Wind pressure *q* (kN/m²)				Wind pressure *q* (kN/m²)/				Wind pressure *q* (kN/m²)				Wind pressure *q* (kN/m²)				Wind pressure *q* (kN/m²)			
				0.0	0.5	0.8	1.1	0.0	0.5	0.8	1.1	0.0	0.5	0.8	1.1	0.0	0.5	0.8	1.1	0.0	0.5	0.8	1.1
Ft=0.30 kN	AST109-207-01-00-00-01	1.41	1.96	53.0	53.0	53.1	53.1	41.9	42.0	42.0	42.0	32.9	33.0	33.0	32.3	27.4	25.3	23.3	21.1	1.4	2.2	2.7	3.2
	AST109-207-01-00-01-00	1.91	2.46	51.5	48.7	46.8	44.9	43.4	43.4	43.3	42.7	33.5	33.5	33.3	32.1	27.8	24.7	22.3	19.7	1.9	3.0	3.7	4.4
	AST109-207-01-00-01-01	2.41	2.96	53.0	53.0	53.1	53.1	41.9	42.0	42.0	42.0	32.9	33.0	33.0	32.3	27.4	25.3	23.3	21.1	2.2	3.9	5.0	6.0
	AST109-207-01-00-02-00	2.91	3.46	51.5	48.7	46.8	44.9	43.4	43.4	43.3	42.7	33.5	33.5	33.3	32.1	27.8	24.7	22.3	19.7	2.7	4.8	6.1	7.4
	AST109-207-01-01-00-00	2.91	3.46	51.5	48.7	46.8	44.9	43.4	43.4	43.3	42.7	33.5	33.5	33.3	32.1	27.8	24.7	22.3	19.7	2.7	4.8	6.1	7.4
	AST109-207-01-00-02-01	3.41	3.96	50.7	49.3	48.0	46.5	41.9	41.4	40.8	39.3	32.9	32.6	31.5	29.6	27.2	23.7	-	-	3.1	6.1	7.9	9.7
	AST109-207-01-01-00-01	3.41	3.96	50.7	49.3	48.0	46.5	41.9	41.4	40.8	39.3	32.9	32.6	31.5	29.6	27.2	23.7	-	-	3.2	6.2	8.0	9.8
	AST109-207-01-00-03-00	3.91	4.46	49.2	45.5	43.0	40.6	43.2	41.9	40.7	39.1	33.5	33.0	31.3	29.0	27.6	23.1	-	-	3.7	7.2	9.3	11.5
	AST109-207-01-01-01-00	3.91	4.46	49.2	45.5	43.0	40.6	43.2	41.9	40.7	39.1	33.5	33.0	31.3	29.0	27.6	23.1	-	-	3.7	7.2	9.4	11.5
	AST109-207-01-00-03-01	4.41	4.96	48.4	45.6	42.8	39.8	41.8	40.9	39.5	36.5	32.8	32.2	30.0	26.9	27.1	22.1	-	-	4.2	8.9	11.7	14.5
	AST109-207-01-01-01-01	4.41	4.96	48.4	45.6	42.8	39.8	41.8	40.9	39.5	36.5	32.8	32.2	30.0	26.9	27.1	22.1	-	-	4.2	8.9	11.7	14.5
	AST109-207-01-00-04-00	4.91	5.46	46.9	42.3	39.3	36.2	42.9	40.4	38.0	35.4	33.4	32.5	29.4	26.0	27.4	21.6	-	-	4.7	10.1	13.3	16.6
	AST109-207-01-02-00-00	4.91	5.46	46.9	42.3	39.3	36.2	42.9	40.4	38.0	35.4	33.4	32.5	29.4	26.0	27.4	21.6	-	-	4.8	10.1	13.4	16.6
	AST109-207-01-00-04-01	5.41	5.96	46.2	42.0	37.7	33.2	41.8	40.4	38.3	33.8	32.8	31.8	28.5	24.2	26.9	20.5	-	-	5.2	12.1	16.2	20.3
	AST109-207-01-02-00-01	5.41	5.96	46.2	42.0	37.7	33.2	41.8	40.4	38.3	33.8	32.8	31.8	28.5	24.2	26.9	20.5	-	-	5.3	12.1	16.2	20.3
	AST109-207-01-00-05-00	5.91	6.46	44.6	39.1	35.5	31.9	42.7	38.9	35.4	31.8	33.4	32.0	27.4	23.0	27.2	20.0	-	-	5.9	13.6	18.2	22.8
	AST109-207-01-02-01-00	5.91	6.46	44.6	39.1	35.5	31.9	42.7	38.9	35.4	31.8	33.4	32.0	27.4	23.0	27.2	20.0	-	-	5.9	13.6	18.2	22.8
Ft=0.45 kN	AST109-207-01-00-00-01	1.41	1.96	52.1	52.1	52.2	52.2	40.9	40.9	41.0	41.0	31.8	31.8	31.9	30.8	26.1	23.4	21.4	19.4	2.4	3.2	3.7	4.2
	AST109-207-01-00-01-00	1.91	2.46	48.9	45.9	44.1	42.2	42.4	42.3	42.2	41.3	32.1	32.0	31.8	30.0	26.2	22.8	20.4	17.7	3.1	4.3	4.9	5.6
	AST109-207-01-00-01-01	2.41	2.96	52.1	52.1	52.2	52.2	40.9	40.9	41.0	41.0	31.8	31.8	31.9	30.8	26.1	23.4	21.4	19.4	3.7	5.4	6.4	7.5
	AST109-207-01-00-02-00	2.91	3.46	48.9	45.9	44.1	42.2	42.4	42.3	42.2	41.3	32.1	32.0	31.8	30.0	26.2	22.8	20.4	17.7	4.5	6.6	7.9	9.1
	AST109-207-01-01-00-00	2.91	3.46	48.9	45.9	44.1	42.2	42.4	42.3	42.2	41.3	32.1	32.0	31.8	30.0	26.2	22.8	20.4	17.7	4.5	6.6	7.9	9.1
	AST109-207-01-00-02-01	3.41	3.96	49.3	47.9	46.5	45.0	40.8	40.1	39.2	37.7	31.8	31.2	30.1	-	25.8	21.8	-	-	5.2	8.2	10.0	11.8
	AST109-207-01-01-00-01	3.41	3.96	49.3	47.9	46.5	45.0	40.8	40.1	39.2	37.7	31.8	31.2	30.1	-	25.8	21.8	-	-	5.2	8.2	10.0	11.8
	AST109-207-01-00-03-00	3.91	4.46	46.7	42.8	40.4	37.9	42.0	40.3	39.1	37.3	32.0	31.3	29.7	-	25.9	21.2	-	-	6.0	9.6	11.7	13.8
	AST109-207-01-01-01-00	3.91	4.46	46.7	42.8	40.4	37.9	42.0	40.3	39.1	37.3	32.0	31.3	29.7	-	25.9	21.2	-	-	6.0	9.6	11.7	13.8
	AST109-207-01-00-03-01	4.41	4.96	46.5	43.6	40.7	37.7	40.8	39.4	37.4	34.4	31.7	30.7	28.3	-	25.6	20.1	-	-	6.8	11.5	14.3	17.1
	AST109-207-01-01-01-01	4.41	4.96	46.5	43.6	40.7	37.7	40.8	39.4	37.4	34.4	31.7	30.7	28.3	-	25.6	20.1	-	-	6.8	11.5	14.3	17.1
	AST109-207-01-00-04-00	4.91	5.46	44.5	39.7	36.7	33.7	41.6	38.4	36.0	33.3	32.0	30.6	27.5	-	25.7	19.6	-	-	7.7	13.1	16.3	19.5
	AST109-207-01-02-00-00	4.91	5.46	44.5	39.7	36.7	33.7	41.6	38.4	36.0	33.3	32.0	30.6	27.5	-	25.7	19.6	-	-	7.7	13.1	16.3	19.5
	AST109-207-01-00-04-01	5.41	5.96	43.6	39.4	35.0	30.5	40.8	38.7	35.6	31.1	31.7	30.1	26.4	-	25.4	18.5	-	-	8.5	15.4	19.5	23.6
	AST109-207-01-02-00-01	5.41	5.96	43.6	39.4	35.0	30.5	40.8	38.7	35.6	31.1	31.7	30.1	26.4	-	25.4	18.5	-	-	8.5	15.4	19.5	23.6
	AST109-207-01-00-05-00	5.91	6.46	42.3	36.6	33.0	29.4	41.3	36.4	32.9	29.3	31.9	29.8	25.4	-	25.4	18.0	-	-	9.5	17.2	21.8	26.4
	AST109-207-01-02-01-00	5.91	6.46	42.3	36.6	33.0	29.4	41.3	36.4	32.9	29.3	31.9	29.8	25.4	-	25.4	18.0	-	-	9.5	17.2	21.8	26.4
Ft=0.60 kN	AST109-207-01-00-00-01	1.41	1.96	51.2	51.2	51.3	51.3	39.8	39.8	39.9	39.9	30.7	30.7	30.8	29.3	24.7	21.5	19.6	17.7	3.3	4.2	4.7	5.2
	AST109-207-01-00-01-00	1.91	2.46	46.4	43.2	41.4	39.5	41.3	41.2	41.1	39.9	30.7	30.6	30.3	28.0	24.6	20.9	18.4	15.8	4.4	5.5	6.2	6.9
	AST109-207-01-00-01-01	2.41	2.96	51.2	51.2	51.3	51.3	39.8	39.8	39.9	39.9	30.7	30.7	30.8	29.3	24.7	21.5	19.6	17.7	5.2	6.9	7.9	8.9
	AST109-207-01-00-02-00	2.91	3.46	46.4	43.2	41.4	39.5	41.3	41.2	41.1	39.9	30.7	30.6	30.3	28.0	24.6	20.9	18.4	15.8	6.2	8.3	9.6	10.9
	AST109-207-01-01-00-00	2.91	3.46	46.4	43.2	41.4	39.5	41.3	41.2	41.1	39.9	30.7	30.6	30.3	28.0	24.6	20.9	18.4	15.8	6.2	8.4	9.6	10.9
	AST109-207-01-00-02-01	3.41	3.96	47.8	46.4	45.0	43.5	39.8	38.8	37.6	36.1	30.7	29.9	28.7	-	24.4	-	-	-	7.2	10.2	12.0	13.8
	AST109-207-01-01-00-01	3.41	3.96	47.8	46.4	45.0	43.5	39.8	38.8	37.6	36.1	30.7	29.9	28.7	-	24.4	-	-	-	7.2	10.2	12.0	13.8
	AST109-207-01-00-03-00	3.91	4.46	44.3	40.2	37.8	-	40.8	38.8	37.5	-	30.6	29.6	-	-	24.3	-	-	-	8.4	11.9	14.0	16.1
	AST109-207-01-01-01-00	3.91	4.46	44.3	40.2	37.8	-	40.8	38.8	37.5	-	30.6	29.6	-	-	24.3	-	-	-	8.4	11.9	14.0	16.1
	AST109-207-01-00-03-01	4.41	4.96	44.5	41.6	38.6	35.6	39.7	37.9	35.2	32.2	30.6	29.2	26.5	-	24.1	-	-	-	9.4	14.1	16.9	19.8
	AST109-207-01-01-01-01	4.41	4.96	44.5	41.6	38.6	35.6	39.7	37.9	35.2	32.2	30.6	29.2	26.5	-	24.1	-	-	-	9.4	14.1	16.9	19.8
	AST109-207-01-00-04-00	4.91	5.46	42.1	37.1	34.1	-	40.4	36.3	34.0	-	30.5	28.7	-	-	24.0	-	-	-	10.6	16.0	19.2	22.4
	AST109-207-01-02-00-00	4.91	5.46	42.1	37.1	34.1	-	40.4	36.3	34.0	-	30.5	28.7	-	-	24.0	-	-	-	10.7	16.0	19.2	22.5
	AST109-207-01-00-04-01	5.41	5.96	41.1	36.8	32.3	27.8	39.7	36.9	32.9	28.4	30.6	28.4	24.4	-	23.8	-	-	-	11.8	18.6	22.7	26.9
	AST109-207-01-02-00-01	5.41	5.96	41.1	36.8	32.3	27.8	39.7	36.9	32.9	28.4	30.6	28.4	24.4	-	23.8	-	-	-	11.8	18.7	22.8	26.9
	AST109-207-01-00-05-00	5.91	6.46	40.0	34.1	30.5	-	39.9	33.9	30.4	-	30.4	27.7	-	-	23.7	-	-	-	13.1	20.8	25.4	30.0
	AST109-207-01-02-01-00	5.91	6.46	40.0	34.1	30.5	-	39.9	33.9	30.4	-	30.4	27.7	-	-	23.7	-	-	-	13.1	20.8	25.4	30.0

4.5 Free AST109-257 tower

As a result of the numerical analyses carried out the values of the permissible load *Fv* acting on a single rack of the AST109-257 tower as well as the values of the minimum required load acting on a single rack *Fv min* to prevent the tower from tipping over were determined. When the value of the permissible load *Fv* was lower than the value of the minimum required load of a single rack *Fv min* to prevent the tower from tipping over the result was rejected and no interpolation was made. The results are summarized in Tab. 4.4. In addition, examples of graphical summary of the results in the form of graphs with different levels of wind load, different levels of horizontal force *FH* and different levels of base protrusion Sc for towers with a height of 2.96 m (Fig. 4.8) and 6.46 m (Fig. 4.9) are presented.

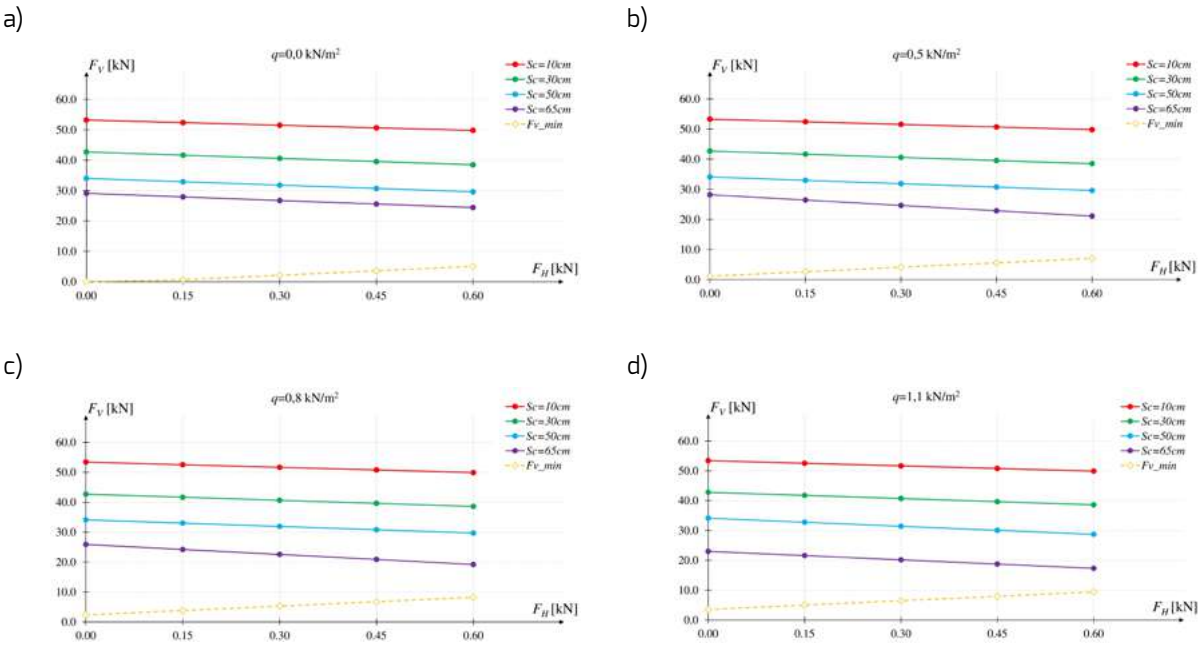

Fig. 4.8
Permissible load of a single rack of the AST109-257-01-00-01-01 tower (Hmax=2.96 m) with different wind:
a) q=0.0 kN/m² / b) q=0.5 kN/m² / c) q=0.8 kN/m² / d) q=1.1 kN/m²

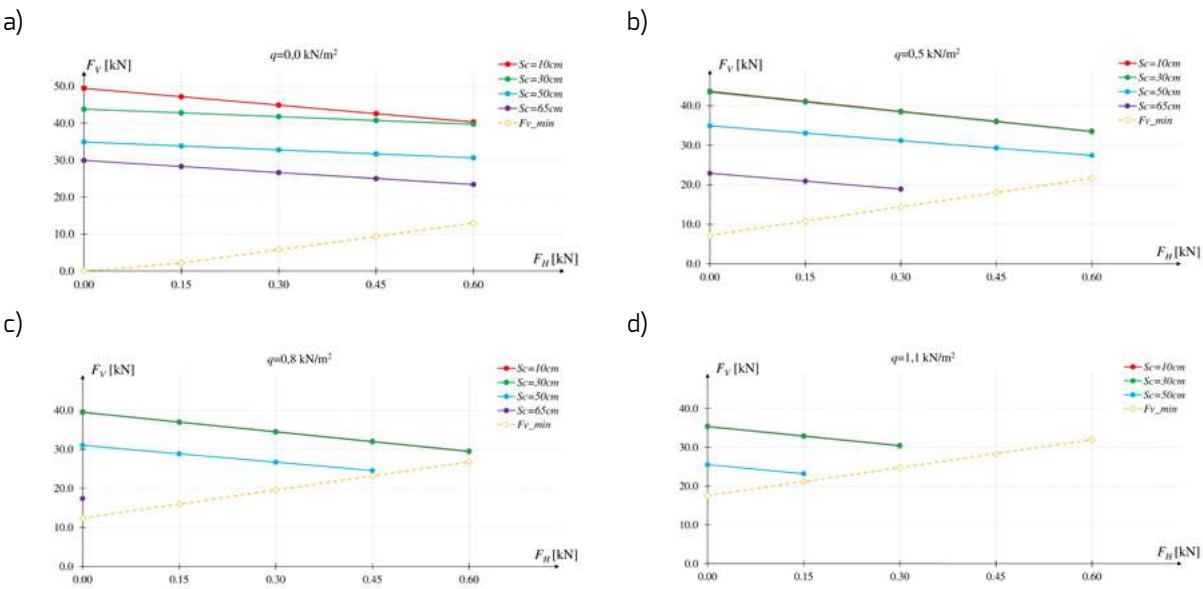

Fig. 4.9
Permissible load of a single rack of the AST109-257-01-02-01-00 tower (Hmax=6.46 m) with different wind:
a) q=0.0 kN/m² / b) q=0.5 kN/m² / c) q=0.8 kN/m² / d) q=1.1 kN/m²

Tab. 4.4 Permissible characteristic (actually occurring on site) loads of free AST109-257 towers

FREE TOWER				AST109-257																Minimum required load of a single rack to prevent the tower from tipping over *Fv min* (kN)			
				Permissible load *Fv* per single tower rack (kN)																			
Horizonta load	Tower name	*Hmin* (m)	*Hmax* (m)	*Sintegr.* =10 cm (*Sp*=6 cm; *Sg*=4 cm)				*Sintegr.* =30 cm (*Sp*=18 cm; *Sg*=12 cm)				*Sintegr.* =50 cm (*Sp*=30 cm; *Sg*=20 cm)				*Sintegr.* =65 cm (*Sp*=40 cm; *Sg*=25 cm)							
				Wind pressure *q* (kN/m²)				Wind pressure *q* (kN/m²)				Wind pressure *q* (kN/m²)				Wind pressure *q* (kN/m²)				Wind pressure *q* (kN/m²)			
				0.0	0.5	0.8	1.1	0.0	0.5	0.8	1.1	0.0	0.5	0.8	1.1	0.0	0.5	0.8	1.1	0.0	0.5	0.8	1.1
FH=0.0 kN	AST109-257-01-00-00-01	1.41	1.96	53.2	53.3	53.4	53.4	42.7	42.7	42.7	42.8	34.0	34.1	34.1	34.1	29.1	28.2	25.9	23.0	0.0	0.4	0.9	1.5
	AST109-257-01-00-01-00	1.91	2.46	54.6	54.3	52.2	50.0	43.8	43.9	43.9	43.9	34.9	35.0	35.0	35.0	29.9	27.8	25.2	22.1	0.0	0.6	1.4	2.2
	AST109-257-01-00-01-01	2.41	2.96	53.2	53.3	53.4	53.4	42.7	42.7	42.7	42.8	34.0	34.1	34.1	34.1	29.1	28.2	25.9	23.0	0.0	1.2	2.3	3.5
	AST109-257-01-00-02-00	2.91	3.46	54.6	54.3	52.2	50.0	43.8	43.9	43.9	43.9	34.9	35.0	35.0	35.0	29.9	27.8	25.2	22.1	0.0	1.5	3.0	4.4
	AST109-257-01-01-00-00	2.91	3.46	54.6	54.3	52.2	50.0	43.8	43.9	43.9	43.9	34.9	35.0	35.0	35.0	29.9	27.8	25.2	22.1	0.0	1.5	3.0	4.4
	AST109-257-01-00-02-01	3.41	3.96	52.7	51.2	49.6	48.0	42.7	42.7	42.6	41.0	34.0	34.1	33.4	31.6	29.1	26.6	23.3	-	0.0	2.4	4.5	6.5
	AST109-257-01-01-00-01	3.41	3.96	52.7	51.2	49.6	48.0	42.7	42.7	42.6	41.0	34.0	34.1	33.4	31.6	z29.1	26.6	23.3	-	0.0	2.4	4.5	6.5
	AST109-257-z01-00-03-00	3.91	4.46	52.9	50.7	48.0	45.1	43.8	43.7	42.4	41.0	34.9	35.0	33.7	31.8	29.9	26.2	22.6	-	0.0	2.9	5.3	7.7
	AST109-257-01-01-01-00	3.91	4.46	52.9	50.7	48.0	45.1	43.8	43.7	42.4	41.0	34.9	35.0	33.7	31.8	29.9	26.2	22.6	-	0.0	2.9	5.3	7.7
	AST109-257-01-00-03-01	4.41	4.96	52.1	49.1	45.9	42.5	42.6	42.6	42.5	39.1	34.0	34.0	32.7	29.2	29.1	25.0	20.7	-	0.0	4.1	7.3	10.5
	AST109-257-01-01-01-01	4.41	4.96	52.1	49.1	45.9	42.5	42.6	42.6	42.5	39.1	34.0	34.0	32.7	29.2	29.1	25.0	20.7	-	0.0	4.1	7.3	10.6
	AST109-257-01-00-04-00	4.91	5.46	51.1	47.2	43.7	40.3	43.8	43.6	40.9	38.2	34.9	34.9	32.3	28.7	29.9	24.5	20.0	-	0.0	4.8	8.4	12.0
	AST109-257-01-02-00-00	4.91	5.46	51.1	47.2	43.7	40.3	43.8	43.6	40.9	38.2	34.9	34.9	32.3	28.7	29.9	24.5	20.0	-	0.0	4.8	8.4	12.1
	AST109-257-01-00-04-01	5.41	5.96	51.6	47.0	42.1	37.1	42.6	42.6	42.4	37.3	34.0	34.0	32.0	26.7	29.1	23.4	18.1	-	0.0	6.4	11.0	15.7
	AST109-257-01-02-00-01	5.41	5.96	51.6	47.0	42.1	37.1	42.6	42.6	42.4	37.3	34.0	34.0	32.0	26.7	29.1	23.4	18.1	-	0.0	6.4	11.1	15.7
	AST109-257-01-00-05-00	5.91	6.46	49.4	43.6	39.5	35.4	43.8	43.4	39.4	35.3	34.9	34.9	31.0	25.5	29.9	22.9	17.4	-	0.0	7.2	12.4	17.6
	AST109-257-01-02-01-00	5.91	6.46	49.4	43.6	39.5	35.4	43.8	43.4	39.4	35.3	34.9	34.9	31.0	25.5	29.9	22.9	17.4	-	0.0	7.2	12.4	17.6
FH=0.15 kN	AST109-257-01-00-00-01	1.41	1.96	52.4	52.4	52.5	52.5	41.7	41.7	41.7	41.8	32.9	33.0	33.0	32.8	27.9	26.4	24.2	21.6	0.4	1.3	1.9	2.5
	AST109-257-01-00-01-00	1.91	2.46	52.7	51.6	49.5	47.3	42.8	42.9	42.9	42.8	33.9	33.9	33.7	33.1	28.5	26.0	23.3	20.2	0.6	1.9	2.6	3.4
	AST109-257-01-00-01-01	2.41	2.96	52.4	52.4	52.5	52.5	41.7	41.7	41.7	41.8	32.9	33.0	33.0	32.8	27.9	26.4	24.2	21.6	0.7	2.6	3.8	5.0
	AST109-257-01-00-02-00	2.91	3.46	52.7	51.6	49.5	47.3	42.8	42.9	42.9	42.8	33.9	33.9	33.7	33.1	28.5	26.0	23.3	20.2	0.9	3.3	4.7	6.2
	AST109-257-01-01-00-00	2.91	3.46	52.7	51.6	49.5	47.3	42.8	42.9	42.9	42.8	33.9	33.9	33.7	33.1	28.5	26.0	23.3	20.2	0.9	3.3	4.7	6.2
	AST109-257-01-00-02-01	3.41	3.96	51.3	49.7	48.1	46.5	41.6	41.5	41.0	39.4	32.9	32.8	32.0	30.0	27.9	24.8	21.5	-	1.0	4.4	6.5	8.5
	AST109-257-01-01-00-01	3.41	3.96	51.3	49.7	48.1	46.5	41.6	41.5	41.0	39.4	32.9	32.8	32.0	30.0	27.9	24.8	21.5	-	1.0	4.5	6.5	8.6
	AST109-257-01-00-03-00	3.91	4.46	50.8	48.1	45.3	42.5	42.8	42.2	40.9	39.5	33.8	33.6	32.1	29.8	28.4	24.3	-	-	1.3	5.3	7.6	10.0
	AST109-257-01-01-01-00	3.91	4.46	50.8	48.1	45.3	42.5	42.8	42.2	40.9	39.5	33.8	33.6	32.1	29.8	28.4	24.3	-	-	1.3	5.3	7.6	10.0
	AST109-257-01-00-03-01	4.41	4.96	50.2	47.0	43.8	40.4	41.6	41.3	40.3	37.0	32.9	32.7	30.9	27.2	27.8	23.1	18.8	-	1.4	6.8	10.0	13.2
	AST109-257-01-01-01-01	4.41	4.96	50.2	47.0	43.8	40.4	41.6	41.3	40.3	37.0	32.9	32.7	30.9	27.2	27.8	23.1	18.8	-	1.4	6.8	10.0	13.2
	AST109-257-01-00-04-00	4.91	5.46	49.0	44.6	41.2	37.7	42.8	41.6	38.9	36.2	33.8	33.3	30.5	26.5	28.4	22.6	-	-	1.7	7.7	11.4	15.0
	AST109-257-01-02-00-00	4.91	5.46	49.0	44.6	41.2	37.7	42.8	41.6	38.9	36.2	33.8	33.3	30.5	26.5	28.4	22.6	-	-	1.7	7.8	11.4	15.0
	AST109-257-01-00-04-01	5.41	5.96	49.1	44.3	39.4	34.4	41.6	41.1	39.7	34.6	32.9	32.5	29.9	24.4	27.7	21.4	16.2	-	1.9	9.6	14.3	19.0
	AST109-257-01-02-00-01	5.41	5.96	49.1	44.3	39.4	34.4	41.6	41.1	39.7	34.6	32.9	32.5	29.9	24.4	27.7	21.4	16.2	-	1.9	9.7	14.3	19.0
	AST109-257-01-00-05-00	5.91	6.46	47.1	41.1	37.0	32.9	42.8	40.9	36.9	32.8	33.8	33.0	28.9	23.2	28.3	20.9	-	-	2.2	10.8	16.0	21.2
	AST109-257-01-02-01-00	5.91	6.46	47.1	41.1	37.0	32.9	42.8	40.9	36.9	32.8	33.8	33.0	28.9	23.2	28.3	20.9	-	-	2.2	10.8	16.0	21.2

Tab. 4.4 cont.

FREE TOWER				AST109-257																Minimum required load of a single rack to prevent the tower from tipping over *Fv min* [kN]			
				Permissible load *Fv* per single tower rack [kN]																			
Horizontal load	Tower name	Hmin [m]	Hmax [m]	*Sintegr.* =10 cm (*Sp*=6 cm; *Sg*=4 cm)				*Sintegr.* =30 cm (*Sp*=18 cm; *Sg*=12 cm)				*Sintegr.* =50 cm (*Sp*=30 cm; *Sg*=20 cm)				*Sintegr.* =65 cm (*Sp*=40 cm; *Sg*=25 cm)							
				Wind pressure *q* [kN/m²]				Wind pressure *q* [kN/m²]/				Wind pressure *q* [kN/m²]				Wind pressure *q* [kN/m²]				Wind pressure *q* [kN/m²]			
				0.0	0.5	0.8	1.1	0.0	0.5	0.8	1.1	0.0	0.5	0.8	1.1	0.0	0.5	0.8	1.1	0.0	0.5	0.8	1.1
Fx=0.30 kN	AST109-257-01-00-00-01	1.41	1.96	51.5	51.6	51.7	51.7	40.6	40.6	40.7	40.7	31.8	31.9	31.9	31.4	26.8	24.7	22.6	20.2	1.3	2.3	2.9	3.5
	AST109-257-01-00-01-00	1.91	2.46	50.8	48.8	46.7	44.6	41.8	41.9	41.9	41.7	32.8	32.9	32.4	31.2	27.1	24.1	21.3	18.3	1.8	3.1	3.9	4.7
	AST109-257-01-00-01-01	2.41	2.96	51.5	51.6	51.7	51.7	40.6	40.6	40.7	40.7	31.8	31.9	31.9	31.4	26.8	24.7	22.6	20.2	2.1	4.1	5.3	6.5
	AST109-257-01-00-02-00	2.91	3.46	50.8	48.8	46.7	44.6	41.8	41.9	41.9	41.7	32.8	32.9	32.4	31.2	27.1	24.1	21.3	18.3	2.6	5.0	6.5	7.9
	AST109-257-01-01-00-00	2.91	3.46	50.8	48.8	46.7	44.6	41.8	41.9	41.9	41.7	32.8	32.9	32.4	31.2	27.1	24.1	21.3	18.3	2.7	5.0	6.5	7.9
	AST109-257-01-00-02-01	3.41	3.96	49.8	48.3	46.7	45.0	40.6	40.3	39.4	37.8	31.8	31.6	30.5	-	26.6	22.9	-	-	3.1	6.5	8.5	10.6
	AST109-257-01-01-00-01	3.41	3.96	49.8	48.3	46.7	45.0	40.6	40.3	39.4	37.8	31.8	31.6	30.5	-	26.6	22.9	-	-	3.1	6.5	8.5	10.6
	AST109-257-01-00-03-00	3.91	4.46	48.8	45.4	42.6	39.9	41.8	40.7	39.4	37.9	32.8	32.3	30.5	-	27.0	22.4	-	-	3.6	7.6	10.0	12.3
	AST109-257-01-01-01-00	3.91	4.46	48.8	45.4	42.6	39.9	41.8	40.7	39.4	37.9	32.8	32.3	30.5	-	27.0	22.4	-	-	3.6	7.6	10.0	12.4
	AST109-257-01-00-03-01	4.41	4.96	48.2	45.0	41.7	38.3	40.5	39.9	38.2	34.8	31.8	31.3	29.1	-	26.5	21.2	-	-	4.1	9.4	12.6	15.8
	AST109-257-01-01-01-01	4.41	4.96	48.2	45.0	41.7	38.3	40.5	39.9	38.2	34.8	31.8	31.3	29.1	-	26.5	21.2	-	-	4.1	9.4	12.6	15.8
	AST109-257-01-00-04-00	4.91	5.46	46.8	42.0	38.6	35.2	41.8	39.6	36.9	34.1	32.8	31.7	28.6	-	26.8	20.6	-	-	4.6	10.7	14.3	17.9
	AST109-257-01-02-00-00	4.91	5.46	46.8	42.0	38.6	35.2	41.8	39.6	36.9	34.1	32.8	31.7	28.6	-	26.8	20.6	-	-	4.7	10.7	14.3	18.0
	AST109-257-01-00-04-01	5.41	5.96	46.5	41.7	36.7	31.7	40.5	39.6	37.0	31.9	31.8	31.1	27.7	-	26.3	19.4	-	-	5.1	12.9	17.6	22.2
	AST109-257-01-02-00-01	5.41	5.96	46.5	41.7	36.7	31.7	40.5	39.6	37.0	31.9	31.8	31.1	27.7	-	26.3	19.4	-	-	5.2	12.9	17.6	22.3
	AST109-257-01-00-05-00	5.91	6.46	44.9	38.6	34.5	30.5	41.8	38.4	34.4	30.4	32.8	31.2	26.7	-	26.7	18.9	-	-	5.8	14.4	19.6	24.8
	AST109-257-01-02-01-00	5.91	6.46	44.9	38.6	34.5	30.5	41.8	38.4	34.4	30.4	32.8	31.2	26.7	-	26.7	18.9	-	-	5.8	14.4	19.6	24.8
Fx=0.45 kN	AST109-257-01-00-00-01	1.41	1.96	50.7	50.7	50.8	50.8	39.6	39.6	39.6	39.7	30.7	30.7	30.8	30.1	25.6	22.9	20.9	18.7	2.3	3.3	3.9	4.4
	AST109-257-01-00-01-00	1.91	2.46	48.8	46.1	44.0	41.8	40.8	40.8	40.8	40.6	31.8	31.8	31.1	29.3	25.7	22.3	19.4	16.3	3.1	4.4	5.1	5.9
	AST109-257-01-00-01-01	2.41	2.96	50.7	50.7	50.8	50.8	39.6	39.6	39.6	39.7	30.7	30.7	30.8	30.1	25.6	22.9	20.9	18.7	3.6	5.6	6.8	7.9
	AST109-257-01-00-02-00	2.91	3.46	48.8	46.1	44.0	41.8	40.8	40.8	40.8	40.6	31.8	31.8	31.1	29.3	25.7	22.3	19.4	16.3	4.4	6.8	8.2	9.7
	AST109-257-01-01-00-00	2.91	3.46	48.8	46.1	44.0	41.8	40.8	40.8	40.8	40.6	31.8	31.8	31.1	29.3	25.7	22.3	19.4	16.3	4.4	6.8	8.2	9.7
	AST109-257-01-00-02-01	3.41	3.96	48.4	46.8	45.2	43.5	39.5	39.1	37.8	36.2	30.7	30.3	29.1	-	25.4	21.1	-	-	5.1	8.5	10.6	12.6
	AST109-257-01-01-00-01	3.41	3.96	48.4	46.8	45.2	43.5	39.5	39.1	37.8	36.2	30.7	30.3	29.1	-	25.4	21.1	-	-	5.1	8.5	10.6	12.6
	AST109-257-01-00-03-00	3.91	4.46	46.7	42.7	40.0	-	40.8	39.2	37.9	-	31.7	30.9	28.9	-	25.5	-	-	-	5.9	9.9	12.3	14.7
	AST109-257-01-01-01-00	3.91	4.46	46.7	42.7	40.0	-	40.8	39.2	37.9	-	31.7	30.9	28.9	-	25.5	-	-	-	5.9	9.9	12.3	14.7
	AST109-257-01-00-03-01	4.41	4.96	46.2	42.9	39.5	36.2	39.5	38.6	36.0	32.7	30.7	30.0	27.3	-	25.1	19.2	-	-	6.7	12.0	15.2	18.4
	AST109-257-01-01-01-01	4.41	4.96	46.2	42.9	39.5	36.2	39.5	38.6	36.0	32.7	30.7	30.0	27.3	-	25.1	19.2	-	-	6.7	12.0	15.2	18.4
	AST109-257-01-00-04-00	4.91	5.46	44.7	39.4	36.0	-	40.8	37.5	34.9	-	31.7	30.1	26.7	-	25.3	-	-	-	7.6	13.6	17.2	20.9
	AST109-257-01-02-00-00	4.91	5.46	44.7	39.4	36.0	-	40.8	37.5	34.9	-	31.7	30.1	26.7	-	25.3	-	-	-	7.6	13.6	17.3	20.9
	AST109-257-01-00-04-01	5.41	5.96	44.0	39.0	33.9	28.9	39.5	38.1	34.2	29.2	30.7	29.6	25.6	-	24.9	17.4	-	-	8.4	16.2	20.8	25.5
	AST109-257-01-02-00-01	5.41	5.96	44.0	39.0	33.9	28.9	39.5	38.1	34.2	29.2	30.7	29.6	25.6	-	24.9	17.4	-	-	8.4	16.2	20.9	25.5
	AST109-257-01-00-05-00	5.91	6.46	42.6	36.0	32.0	-	40.7	35.9	31.9	-	31.7	29.3	24.6	-	25.0	-	-	-	9.4	18.0	23.2	28.4
	AST109-257-01-02-01-00	5.91	6.46	42.6	36.0	32.0	-	40.7	35.9	31.9	-	31.7	29.3	24.6	-	25.0	-	-	-	9.4	18.0	23.2	28.4
Fx=0.60 kN	AST109-257-01-00-00-01	1.41	1.96	49.8	49.8	49.9	49.9	38.5	38.5	38.6	38.6	29.6	29.6	29.7	28.7	24.4	21.1	19.2	17.3	3.3	4.3	4.8	5.4
	AST109-257-01-00-01-00	1.91	2.46	46.9	43.3	41.2	39.1	39.8	39.8	39.8	39.5	30.7	30.7	29.8	27.4	24.3	20.4	17.4	14.4	4.3	5.6	6.4	7.1
	AST109-257-01-00-01-01	2.41	2.96	49.8	49.8	49.9	49.9	38.5	38.5	38.6	38.6	29.6	29.6	29.7	28.7	24.4	21.1	19.2	17.3	5.1	7.1	8.2	9.4
	AST109-257-01-00-02-00	2.91	3.46	46.9	43.3	41.2	39.1	39.8	39.8	39.8	39.5	30.7	30.7	29.8	27.4	24.3	20.4	17.4	14.4	6.2	8.5	10.0	11.4
	AST109-257-01-01-00-00	2.91	3.46	46.9	43.3	41.2	39.1	39.8	39.8	39.8	39.5	30.7	30.7	29.8	27.4	24.3	20.4	17.4	14.4	6.2	8.6	10.0	11.4
	AST109-257-01-00-02-01	3.41	3.96	47.0	45.3	43.7	-	38.5	37.9	36.2	-	29.6	29.1	-	-	24.1	-	-	-	7.1	10.6	12.6	14.7
	AST109-257-01-01-00-01	3.41	3.96	47.0	45.3	43.7	-	38.5	37.9	36.2	-	29.6	29.1	-	-	24.1	-	-	-	7.1	10.6	12.6	14.7
	AST109-257-01-00-03-00	3.91	4.46	44.7	40.0	37.3	-	39.8	37.7	36.3	-	30.7	29.6	-	-	24.0	-	-	-	8.3	12.2	14.6	17.0
	AST109-257-01-01-01-00	3.91	4.46	44.7	40.0	37.3	-	39.8	37.7	36.3	-	30.7	29.6	-	-	24.0	-	-	-	8.3	12.2	14.6	17.0
	AST109-257-01-00-03-01	4.41	4.96	44.2	40.8	37.4	-	38.4	37.2	33.9	-	29.6	28.6	-	-	23.8	-	-	-	9.3	14.7	17.9	21.1
	AST109-257-01-01-01-01	4.41	4.96	44.2	40.8	37.4	-	38.4	37.2	33.9	-	29.6	28.6	-	-	23.8	-	-	-	9.3	14.7	17.9	21.1
	AST109-257-01-00-04-00	4.91	5.46	42.5	36.8	33.4	-	39.7	35.5	32.9	-	30.6	28.5	-	-	23.7	-	-	-	10.5	16.6	20.2	23.8
	AST109-257-01-02-00-00	4.91	5.46	42.5	36.8	33.4	-	39.7	35.5	32.9	-	30.6	28.5	-	-	23.7	-	-	-	10.6	16.6	20.2	23.8
	AST109-257-01-00-04-01	5.41	5.96	41.4	36.3	31.2	-	38.4	36.6	31.5	-	29.6	28.1	-	-	23.5	-	-	-	11.7	19.4	24.1	28.8
	AST109-257-01-02-00-01	5.41	5.96	41.4	36.3	31.2	-	38.4	36.6	31.5	-	29.6	28.1	-	-	23.5	-	-	-	11.7	19.5	24.1	28.8
	AST109-257-01-00-05-00	5.91	6.46	40.3	33.5	29.5	-	39.7	33.4	29.4	-	30.6	27.4	-	-	23.4	-	-	-	13.0	21.6	26.8	32.0
	AST109-257-01-02-01-00	5.91	6.46	40.3	33.5	29.5	-	39.7	33.4	29.4	-	30.6	27.4	-	-	23.4	-	-	-	13.0	21.6	26.8	32.0

4.6 Free AST109-307 tower

As a result of the numerical analyses carried out the values of the permissible load *Fv* acting on a single rack of the AST109-307 tower as well as the values of the minimum required load acting on a single rack *Fv min* to prevent the tower from tipping over were determined. When the value of the permissible load *Fv* was lower than the value of the minimum required load of a single rack *Fv min* to prevent the tower from tipping over the result was rejected and no interpolation was made. The results are summarized in Tab. 4.5. In addition, examples of graphical summary of the results in the form of graphs with different levels of wind load, different levels of horizontal force *FH* and different levels of base protrusion Sc for towers with a height of 2.96 m (Fig. 4.10) and 6.46 m (Fig. 4.11) are presented.

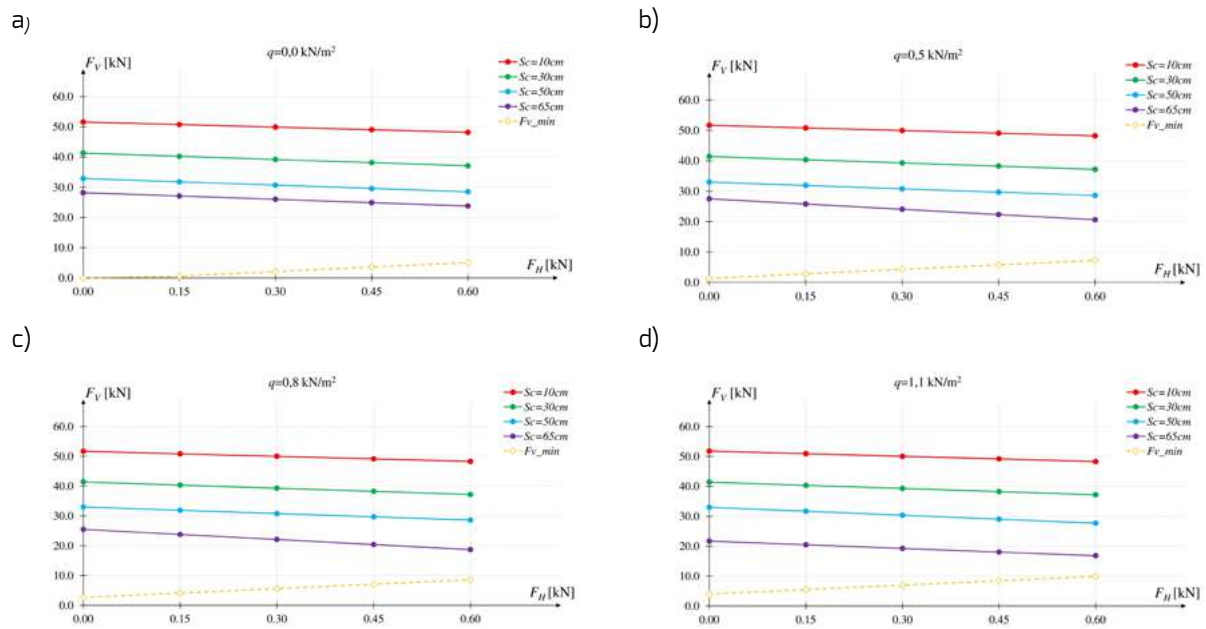

Fig. 4.10
Permissible load of a single rack of the AST109-307-01-00-01-01 tower (Hmax=2.96 m) with different wind load:
a) q=0.0 kN/m² / b) q=0.5 kN/m² / c) q=0.8 kN/m² / d) q=1.1 kN/m²

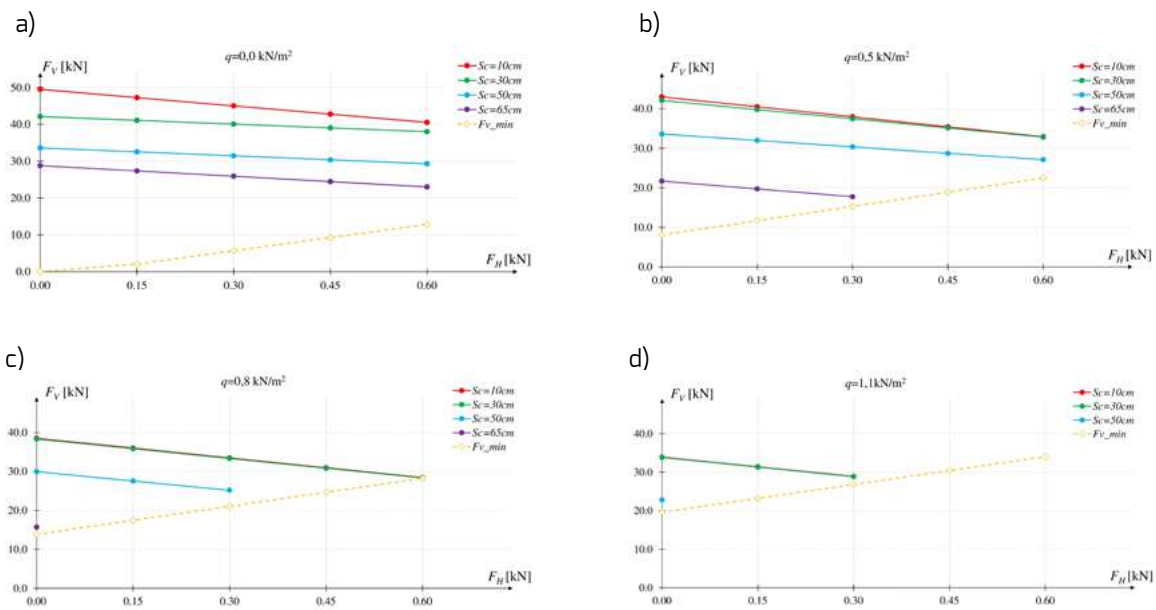

Fig. 4.11
Permissible load of a single rack of the AST109-307-01-02-01-00 tower (Hmax=6.46 m) with different wind load:
a) q=0.0 kN/m² / b) q=0.5 kN/m² / c) q=0.8 kN/m² / d) q=1.1 kN/m²

Tab. 4.5 Permissible characteristic (actually occurring on site) loads of free AST109-307 towers

FREE TOWER				AST109-307																Minimum required load of a single rack to prevent the tower from tipping over *Fv min* [kN]			
				Permissible load *Fv* per single tower rack [kN]																			
Horizontal load	Tower name	*Hmin* [m]	*Hmax* [m]	*Sintegr.* =10 cm (*Sp*=6 cm; *Sg*=4 cm)				*Sintegr.* =30 cm (*Sp*=18 cm; *Sg*=12 cm)				*Sintegr.* =50 cm (*Sp*=30 cm; *Sg*=20 cm)				*Sintegr.* =65 cm (*Sp*=40 cm; *Sg*=25 cm)							
				Wind pressure *q* [kN/m²]				Wind pressure *q* [kN/m²]				Wind pressure *q* [kN/m²]				Wind pressure *q* [kN/m²]				Wind pressure *q* [kN/m²]			
				0.0	0.5	0.8	1.1	0.0	0.5	0.8	1.1	0.0	0.5	0.8	1.1	0.0	0.5	0.8	1.1	0.0	0.5	0.8	1.1
Fi=0.0 kN	AST109-307-01-00-00-01	1.41	1.96	51.6	51.7	51.7	51.8	41.3	41.4	41.4	41.4	32.9	33.0	33.0	33.0	28.2	27.5	25.5	21.7	0.0	0.4	1.1	1.7
	AST109-307-01-00-01-00	1.91	2.46	52.6	52.6	51.9	49.5	42.1	42.2	42.2	42.2	33.6	33.6	33.6	33.7	28.8	26.9	24.1	20.7	0.0	0.7	1.6	2.5
	AST109-307-01-00-01-01	2.41	2.96	51.6	51.7	51.7	51.8	41.3	41.4	41.4	41.4	32.9	33.0	33.0	33.0	28.2	27.5	25.5	21.7	0.0	1.4	2.7	4.0
	AST109-307-01-00-02-00	2.91	3.46	52.6	52.6	51.9	49.5	42.1	42.2	42.2	42.2	33.6	33.6	33.6	33.7	28.8	26.9	24.1	20.7	0.0	1.8	3.4	4.9
	AST109-307-01-01-00-00	2.91	3.46	52.6	52.6	51.9	49.5	42.1	42.2	42.2	42.2	33.6	33.6	33.6	33.7	28.8	26.9	24.1	20.7	0.0	1.8	3.4	5.0
	AST109-307-01-00-02-01	3.41	3.96	51.6	49.9	47.9	46.0	41.3	41.4	41.3	39.3	32.9	33.0	32.3	30.0	28.2	25.7	22.4	-	0.0	2.8	5.1	7.4
	AST109-307-01-01-00-01	3.41	3.96	51.6	49.9	47.9	46.0	41.3	41.4	41.3	39.3	32.9	33.0	32.3	30.0	28.2	25.7	22.4	-	0.0	2.8	5.1	7.4
	AST109-307-01-00-03-00	3.91	4.46	51.6	49.4	47.4	44.3	42.1	42.2	40.9	39.4	33.6	33.6	32.4	30.1	28.8	25.2	21.3	-	0.0	3.3	6.0	8.6
	AST109-307-01-01-01-00	3.91	4.46	51.6	49.4	47.4	44.3	42.1	42.2	40.9	39.4	33.6	33.6	32.4	30.1	28.8	25.2	21.3	-	0.0	3.3	6.0	8.6
	AST109-307-01-00-03-01	4.41	4.96	51.6	48.0	44.1	40.3	41.3	41.3	41.1	37.3	32.9	32.9	31.6	26.9	28.2	24.0	19.4	-	0.0	4.7	8.3	11.9
	AST109-307-01-01-01-01	4.41	4.96	51.6	48.0	44.1	40.3	41.3	41.3	41.1	37.3	32.9	32.9	31.6	26.9	28.2	24.0	19.4	-	0.0	4.7	8.3	11.9
	AST109-307-01-00-04-00	4.91	5.46	50.5	46.2	43.0	39.1	42.1	42.1	39.6	36.6	33.6	33.6	31.1	26.4	28.8	23.4	18.5	-	0.0	5.4	9.4	13.5
	AST109-307-01-02-00-00	4.91	5.46	50.5	46.2	43.0	39.1	42.1	42.1	39.6	36.6	33.6	33.6	31.1	26.4	28.8	23.4	18.5	-	0.0	5.4	9.5	13.5
	AST109-307-01-00-04-01	5.41	5.96	51.6	46.2	40.3	34.5	41.3	41.3	41.0	35.2	32.9	32.9	30.9	23.9	28.2	22.2	16.3	-	0.0	7.2	12.5	17.7
	AST109-307-01-02-00-01	5.41	5.96	51.6	46.2	40.3	34.5	41.3	41.3	41.0	35.2	32.9	32.9	30.9	23.9	28.2	22.2	16.3	-	0.0	7.2	12.5	17.7
	AST109-307-01-00-05-00	5.91	6.46	49.5	43.0	38.5	33.9	42.1	42.1	38.3	33.8	33.6	33.6	29.9	22.8	28.8	21.7	15.7	-	0.0	8.1	13.8	19.6
	AST109-307-01-02-01-00	5.91	6.46	49.5	43.0	38.5	33.9	42.1	42.1	38.3	33.8	33.6	33.6	29.9	22.8	28.8	21.7	15.7	-	0.0	8.1	13.9	19.6
Fi=0.15 kN	AST109-307-01-00-00-01	1.41	1.96	50.8	50.8	50.9	50.9	40.3	40.4	40.4	40.4	31.8	31.9	31.9	31.7	27.1	25.8	23.8	20.5	0.3	1.4	2.1	2.7
	AST109-307-01-00-01-00	1.91	2.46	51.3	50.3	49.2	46.8	41.1	41.2	41.2	41.2	32.5	32.5	32.5	32.0	27.5	25.1	22.2	18.8	0.6	2.0	2.8	3.7
	AST109-307-01-00-01-01	2.41	2.96	50.8	50.8	50.9	50.9	40.3	40.4	40.4	40.4	31.8	31.9	31.9	31.7	27.1	25.8	23.8	20.5	0.6	2.8	4.2	5.5
	AST109-307-01-00-02-00	2.91	3.46	51.3	50.3	49.2	46.8	41.1	41.2	41.2	41.2	32.5	32.5	32.5	32.0	27.5	25.1	22.2	18.8	0.8	3.5	5.1	6.7
	AST109-307-01-01-00-00	2.91	3.46	51.3	50.3	49.2	46.8	41.1	41.2	41.2	41.2	32.5	32.5	32.5	32.0	27.5	25.1	22.2	18.8	0.9	3.5	5.1	6.7
	AST109-307-01-00-02-01	3.41	3.96	50.2	48.4	46.4	44.5	40.3	40.2	39.7	37.7	31.8	31.8	30.8	28.3	27.0	23.9	-	-	1.0	4.8	7.1	9.4
	AST109-307-01-01-00-01	3.41	3.96	50.2	48.4	46.4	44.5	40.3	40.2	39.7	37.7	31.8	31.8	30.8	28.3	27.0	23.9	-	-	1.0	4.8	7.1	9.4
	AST109-307-01-00-03-00	3.91	4.46	49.9	47.0	44.8	41.6	41.1	40.7	39.4	37.9	32.5	32.3	30.8	-	27.5	23.3	-	-	1.2	5.6	8.3	10.9
	AST109-307-01-01-01-00	3.91	4.46	49.9	47.0	44.8	41.6	41.1	40.7	39.4	37.9	32.5	32.3	30.8	-	27.5	23.3	-	-	1.2	5.6	8.3	11.0
	AST109-307-01-00-03-01	4.41	4.96	49.7	45.9	42.0	38.2	40.3	40.1	39.0	35.1	31.8	31.7	29.7	25.0	27.0	22.1	-	-	1.3	7.3	10.9	14.5
	AST109-307-01-01-01-01	4.41	4.96	49.7	45.9	42.0	38.2	40.3	40.1	39.0	35.1	31.8	31.7	29.7	25.0	27.0	22.1	-	-	1.4	7.4	10.9	14.5
	AST109-307-01-00-04-00	4.91	5.46	48.6	43.7	40.4	36.5	41.1	40.2	37.6	34.6	32.5	32.2	29.2	-	27.4	21.5	-	-	1.6	8.3	12.4	16.4
	AST109-307-01-02-00-00	4.91	5.46	48.6	43.7	40.4	36.5	41.1	40.2	37.6	34.6	32.5	32.2	29.2	-	27.4	21.5	-	-	1.6	8.4	12.4	16.4
	AST109-307-01-00-04-01	5.41	5.96	49.1	43.5	37.6	31.8	40.3	39.9	38.3	32.5	31.8	31.6	28.5	21.6	26.9	20.2	-	-	1.8	10.5	15.7	21.0
	AST109-307-01-02-00-01	5.41	5.96	49.1	43.5	37.6	31.8	40.3	39.9	38.3	32.5	31.8	31.6	28.5	21.6	26.9	20.2	-	-	1.8	10.5	15.7	21.0
	AST109-307-01-00-05-00	5.91	6.46	47.3	40.5	36.0	31.4	41.1	39.8	35.8	31.3	32.5	32.0	27.5	-	27.4	19.7	-	-	2.1	11.7	17.4	23.2
	AST109-307-01-02-01-00	5.91	6.46	47.3	40.5	36.0	31.4	41.1	39.8	35.8	31.3	32.5	32.0	27.5	-	27.4	19.7	-	-	2.1	11.7	17.5	23.2

Tab. 4.5 cont.

FREE TOWER				AST109-307																Minimum required load of a single rack to prevent the tower from tipping over *Fv min* [kN]			
				Permissible load *Fv* per single tower rack [kN]																			
Horizontal load	Tower name	Hmin [m]	Hmax [m]	*Sintegr.* =10 cm (*Sp*=6 cm; *Sg*=4 cm)				*Sintegr.* =30 cm (*Sp*=18 cm; *Sg*=12 cm)				*Sintegr.* =50 cm (*Sp*=30 cm; *Sg*=20 cm)				*Sintegr.* =65 cm (*Sp*=40 cm; *Sg*=25 cm)							
				Wind pressure *q* [kN/m²]				Wind pressure *q* [kN/m²]/				Wind pressure *q* [kN/m²]				Wind pressure *q* [kN/m²]				Wind pressure *q* [kN/m²]			
				0.0	0.5	0.8	1.1	0.0	0.5	0.8	1.1	0.0	0.5	0.8	1.1	0.0	0.5	0.8	1.1	0.0	0.5	0.8	1.1
Ft=0.30 kN	AST109-307-01-00-00-01	1.41	1.96	49.9	50.0	50.0	50.1	39.2	39.3	39.3	39.3	30.7	30.8	30.8	30.4	26.0	24.1	22.1	19.3	1.3	2.4	3.0	3.7
	AST109-307-01-00-01-00	1.91	2.46	49.9	48.0	46.4	44.0	40.1	40.2	40.2	40.2	31.5	31.5	31.4	30.2	26.3	23.4	20.3	16.9	1.8	3.2	4.1	4.9
	AST109-307-01-00-01-01	2.41	2.96	49.9	50.0	50.0	50.1	39.2	39.3	39.3	39.3	30.7	30.8	30.8	30.4	26.0	24.1	22.1	19.3	2.1	4.3	5.6	7.0
	AST109-307-01-00-02-00	2.91	3.46	49.9	48.0	46.4	44.0	40.1	40.2	40.2	40.2	31.5	31.5	31.4	30.2	26.3	23.4	20.3	16.9	2.6	5.3	6.9	8.4
	AST109-307-01-01-00-00	2.91	3.46	49.9	48.0	46.4	44.0	40.1	40.2	40.2	40.2	31.5	31.5	31.4	30.2	26.3	23.4	20.3	16.9	2.6	5.3	6.9	8.5
	AST109-307-01-00-02-01	3.41	3.96	48.8	46.9	45.0	43.1	39.2	39.1	38.1	36.1	30.7	30.6	29.3	-	25.9	22.1	-	-	3.0	6.8	9.1	11.5
	AST109-307-01-01-00-01	3.41	3.96	48.8	46.9	45.0	43.1	39.2	39.1	38.1	36.1	30.7	30.6	29.3	-	25.9	22.1	-	-	3.0	6.9	9.2	11.5
	AST109-307-01-00-03-00	3.91	4.46	48.3	44.6	42.1	39.0	40.1	39.3	37.9	36.4	31.5	31.1	29.3	-	26.1	21.5	-	-	3.5	8.0	10.6	13.3
	AST109-307-01-01-01-00	3.91	4.46	48.3	44.6	42.1	39.0	40.1	39.3	37.9	36.4	31.5	31.1	29.3	-	26.1	21.5	-	-	3.6	8.0	10.6	13.3
	AST109-307-01-00-03-01	4.41	4.96	47.7	43.8	39.9	36.1	39.2	38.8	36.8	33.0	30.7	30.5	27.7	-	25.8	20.2	-	-	4.0	10.0	13.6	17.2
	AST109-307-01-01-01-01	4.41	4.96	47.7	43.8	39.9	36.1	39.2	38.8	36.8	33.0	30.7	30.5	27.7	-	25.8	20.2	-	-	4.0	10.0	13.6	17.2
	AST109-307-01-00-04-00	4.91	5.46	46.6	41.3	37.8	33.9	40.1	38.4	35.6	32.6	31.5	30.7	27.2	-	26.0	19.6	-	-	4.6	11.3	15.3	19.3
	AST109-307-01-02-00-00	4.91	5.46	46.6	41.3	37.8	33.9	40.1	38.4	35.6	32.6	31.5	30.7	27.2	-	26.0	19.6	-	-	4.6	11.3	15.3	19.4
	AST109-307-01-00-04-01	5.41	5.96	46.6	40.7	34.9	29.1	39.2	38.6	35.6	29.8	30.8	30.3	26.2	-	25.7	18.3	-	-	5.0	13.8	19.0	24.2
	AST109-307-01-02-00-01	5.41	5.96	46.6	40.7	34.9	29.1	39.2	38.6	35.6	29.8	30.8	30.3	26.2	-	25.7	18.3	-	-	5.1	13.8	19.0	24.2
	AST109-307-01-00-05-00	5.91	6.46	45.0	38.0	33.5	28.9	40.1	37.5	33.3	28.8	31.5	30.4	25.2	-	25.9	17.8	-	-	5.7	15.3	21.1	26.8
	AST109-307-01-02-01-00	5.91	6.46	45.0	38.0	33.5	28.9	40.1	37.5	33.3	28.8	31.5	30.4	25.2	-	25.9	17.8	-	-	5.7	15.3	21.1	26.8
Ft=0.45 kN	AST109-307-01-00-00-01	1.41	1.96	49.1	49.1	49.2	49.2	38.2	38.3	38.3	38.3	29.6	29.7	29.7	29.0	24.9	22.3	20.4	18.0	2.3	3.4	4.0	4.7
	AST109-307-01-00-01-00	1.91	2.46	48.6	45.6	43.7	41.3	39.0	39.1	39.1	39.1	30.4	30.4	30.2	28.5	25.0	21.6	18.3	15.0	3.0	4.5	5.3	6.2
	AST109-307-01-00-01-01	2.41	2.96	49.1	49.1	49.2	49.2	38.2	38.3	38.3	38.3	29.6	29.7	29.7	29.0	24.9	22.3	20.4	18.0	3.6	5.8	7.1	8.4
	AST109-307-01-00-02-00	2.91	3.46	48.6	45.6	43.7	41.3	39.0	39.1	39.1	39.1	30.4	30.4	30.2	28.5	25.0	21.6	18.3	15.0	4.3	7.0	8.6	10.2
	AST109-307-01-01-00-00	2.91	3.46	48.6	45.6	43.7	41.3	39.0	39.1	39.1	39.1	30.4	30.4	30.2	28.5	25.0	21.6	18.3	15.0	4.4	7.0	8.6	10.2
	AST109-307-01-00-02-01	3.41	3.96	47.4	45.4	43.5	-	38.2	37.9	36.4	-	29.6	29.5	27.7	-	24.7	-	-	-	5.0	8.9	11.2	13.5
	AST109-307-01-01-00-01	3.41	3.96	47.4	45.4	43.5	-	38.2	37.9	36.4	-	29.6	29.5	27.7	-	24.7	-	-	-	5.0	8.9	11.2	13.5
	AST109-307-01-00-03-00	3.91	4.46	46.6	42.2	39.4	-	39.0	37.8	36.4	-	30.4	29.8	-	-	24.8	-	-	-	5.9	10.3	12.9	15.6
	AST109-307-01-01-01-00	3.91	4.46	46.6	42.2	39.4	-	39.0	37.8	36.4	-	30.4	29.8	-	-	24.8	-	-	-	5.9	10.3	13.0	15.6
	AST109-307-01-00-03-01	4.41	4.96	45.8	41.7	37.8	-	38.2	37.5	34.6	-	29.7	29.2	25.8	-	24.6	-	-	-	6.6	12.6	16.2	19.8
	AST109-307-01-01-01-01	4.41	4.96	45.8	41.7	37.8	-	38.2	37.5	34.6	-	29.7	29.2	25.8	-	24.6	-	-	-	6.6	12.6	16.2	19.8
	AST109-307-01-00-04-00	4.91	5.46	44.7	38.8	35.2	-	39.0	36.5	33.6	-	30.4	29.3	-	-	24.6	-	-	-	7.5	14.2	18.3	22.3
	AST109-307-01-02-00-00	4.91	5.46	44.7	38.8	35.2	-	39.0	36.5	33.6	-	30.4	29.3	-	-	24.6	-	-	-	7.5	14.3	18.3	22.3
	AST109-307-01-00-04-01	5.41	5.96	44.1	38.0	32.1	-	38.2	37.2	32.8	-	29.7	29.0	23.8	-	24.4	-	-	-	8.3	17.0	22.3	27.5
	AST109-307-01-02-00-01	5.41	5.96	44.1	38.0	32.1	-	38.2	37.2	32.8	-	29.7	29.0	23.8	-	24.4	-	-	-	8.3	17.1	22.3	27.5
	AST109-307-01-00-05-00	5.91	6.46	42.8	35.4	30.9	-	39.0	35.1	30.8	-	30.4	28.7	-	-	24.5	-	-	-	9.3	18.9	24.7	30.4
	AST109-307-01-02-01-00	5.91	6.46	42.8	35.4	30.9	-	39.0	35.1	30.8	-	30.4	28.7	-	-	24.5	-	-	-	9.3	18.9	24.7	30.4
Ft=0.60 kN	AST109-307-01-00-00-01	1.41	1.96	48.2	48.2	48.3	48.3	37.1	37.2	37.2	37.2	28.5	28.6	28.6	27.7	23.8	20.6	18.7	16.8	3.3	4.3	5.0	5.7
	AST109-307-01-00-01-00	1.91	2.46	47.2	43.3	40.9	38.5	38.0	38.1	38.1	38.1	29.3	29.3	29.1	26.7	23.7	19.8	16.4	13.1	4.3	5.7	6.6	7.4
	AST109-307-01-00-01-01	2.41	2.96	48.2	48.2	48.3	48.3	37.1	37.2	37.2	37.2	28.5	28.6	28.6	27.7	23.8	20.6	18.7	16.8	5.0	7.2	8.6	9.9
	AST109-307-01-00-02-00	2.91	3.46	47.2	43.3	40.9	38.5	38.0	38.1	38.1	38.1	29.3	29.3	29.1	26.7	23.7	19.8	16.4	13.1	6.1	8.8	10.4	11.9
	AST109-307-01-01-00-00	2.91	3.46	47.2	43.3	40.9	38.5	38.0	38.1	38.1	38.1	29.3	29.3	29.1	26.7	23.7	19.8	16.4	13.1	6.1	8.8	10.4	12.0
	AST109-307-01-00-02-01	3.41	3.96	46.0	43.9	42.0	-	37.1	36.7	34.8	-	28.5	28.3	-	-	23.6	-	-	-	7.1	10.9	13.2	15.5
	AST109-307-01-01-00-01	3.41	3.96	46.0	43.9	42.0	-	37.1	36.7	34.8	-	28.5	28.3	-	-	23.6	-	-	-	7.1	10.9	13.2	15.5
	AST109-307-01-00-03-00	3.91	4.46	45.0	39.8	36.7	-	38.0	36.3	34.8	-	29.3	28.6	-	-	23.5	-	-	-	8.2	12.6	15.3	17.9
	AST109-307-01-01-01-00	3.91	4.46	45.0	39.8	36.7	-	38.0	36.3	34.8	-	29.3	28.6	-	-	23.5	-	-	-	8.2	12.6	15.3	17.9
	AST109-307-01-00-03-01	4.41	4.96	43.8	39.5	35.7	-	37.1	36.3	32.5	-	28.6	28.0	-	-	23.3	-	-	-	9.2	15.2	18.8	22.4
	AST109-307-01-01-01-01	4.41	4.96	43.8	39.5	35.7	-	37.1	36.3	32.5	-	28.6	28.0	-	-	23.3	-	-	-	9.3	15.2	18.8	22.4
	AST109-307-01-00-04-00	4.91	5.46	42.7	36.4	32.6	-	38.0	34.6	31.6	-	29.3	27.8	-	-	23.2	-	-	-	10.5	17.2	21.2	25.2
	AST109-307-01-02-00-00	4.91	5.46	42.7	36.4	32.6	-	38.0	34.6	31.6	-	29.3	27.8	-	-	23.2	-	-	-	10.5	17.2	21.2	25.3
	AST109-307-01-00-04-01	5.41	5.96	41.6	35.2	29.4	-	37.1	35.8	30.1	-	28.6	27.7	-	-	23.1	-	-	-	11.6	20.3	25.5	30.8
	AST109-307-01-02-00-01	5.41	5.96	41.6	35.2	29.4	-	37.1	35.8	30.1	-	28.6	27.7	-	-	23.1	-	-	-	11.6	20.3	25.6	30.8
	AST109-307-01-00-05-00	5.91	6.46	40.5	32.9	28.4	-	38.0	32.8	28.3	-	29.3	27.1	-	-	23.0	-	-	-	12.9	22.5	28.3	34.0
	AST109-307-01-02-01-00	5.91	6.46	40.5	32.9	28.4	-	38.0	32.8	28.3	-	29.3	27.1	-	-	23.0	-	-	-	12.9	22.5	28.3	34.0

5. TOWERS AT INSTALLATION

The calculations for the towers at installation concerned towers of the height of up to 9.96 m. Higher tower heights require the use of additional anchors to be fastened to the structural elements (walls) to ensure the stability of the towers. Two wind load directions were considered for each tower height. The calculations were made for the towers with the maximum base and head protrusion. The required ballast values ensure both rotational and travelling stability.

5.1 Static diagram

The tower at installation has a diagram of a free tower (Fig. 5.1), with the additional components affected by the wind which include: ballast and a person installing the tower.

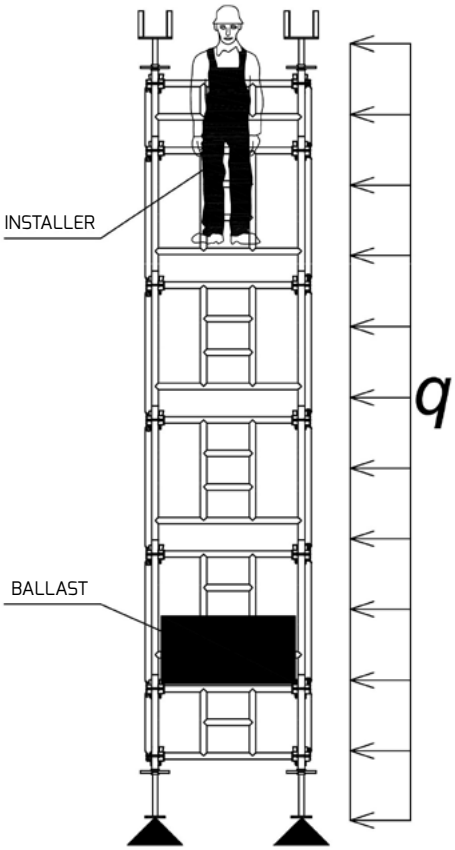

Fig. 5.1
Static diagram of towers at installation

For the towers at installation the following loads were considered:

- structure dead weight,
- wind load of the structure: 0.2 kN/m² (PN-EN 12812 sec. 8.2.4.2) and 0,1 kN/m²,
- wind action of the tower installer (the assumed coefficient *cf* = 1.3 and the installer's surface area of 0.7 m² - PN-EN 1004-1 sec. 9.4.2.2.3,
- wind action on the ballast (assumed coefficient *cf* = 1.3 and ballast surface area of 0.5 m²).

5.2 Ballasting at installation

Tab. 5.1 shows the values of the required ballast for the towers exposed to wind of 0.1 kN/m² which corresponds to a wind speed of 12.6 m/s. Tab. 5.2 shows the values of the required ballast for the towers exposed to wind of 0.2 kN/m² which corresponds to a wind speed of 17.9 m/s. The values of the given wind speeds correspond to gusts. The "-" sign in Tab. 5.1 and Tab. 5.2 means no ballast is required. The components where the ballast will be placed must be designed to carry the required loads.

Tab. 5.1 Required ballast for installation of AST109 towers at 0.1kN/m² wind pressure

TOWERS AT INSTALLATION				Required total ballast (kN)				
				Tower type				
Wind pressure	Tower name		H_{max} (m)	AST109-109 (1.09 x 1.09 m)	AST109-157 (1.09 x 1.57 m)	AST109-207 (1.09 x 2.07 m)	AST109-257 (1.09 x 2.57 m)	AST109-307 (1.09 x 3.07 m)
0.1 kN/m²	AST109	01-00-00-01	1.96	-	-	-	-	-
	AST109	01-00-01-00	2.46	-	-	-	-	-
	AST109	01-00-01-01	2.96	-	-	-	-	-
	AST109	01-00-02-00	3.46	-	-	-	-	-
	AST109	01-01-00-00	3.46	-	-	-	-	-
	AST109	01-00-02-01	3.96	-	-	-	-	-
	AST109	01-01-00-01	3.96	-	-	-	-	-
	AST109	01-00-03-00	4.46	-	-	-	-	-
	AST109	01-01-01-00	4.46	0.4	-	-	-	0.4
	AST109	01-00-03-01	4.96	0.7	0.6	0.8	0.9	1.1
	AST109	01-01-01-01	4.96	0.8	0.7	0.8	0.9	1.1
	AST109	01-00-04-00	5.46	1.3	1.1	1.2	1.3	1.6
	AST109	01-02-00-00	5.46	1.4	1.2	1.3	1.4	1.6
	AST109	01-00-04-01	5.96	1.8	1.6	1.9	2.1	2.5
	AST109	01-02-00-01	5.96	1.9	1.7	2.0	2.2	2.5
	AST109	01-00-05-00	6.46	2.5	2.2	2.4	2.7	3.0
	AST109	01-02-01-00	6.46	2.5	2.2	2.5	2.8	3.1
	AST109	01-00-05-01	6.96	3.1	2.9	3.3	3.7	4.2
	AST109	01-02-01-01	6.96	3.2	2.9	3.4	3.8	4.3
	AST109	01-00-06-00	7.46	3.9	3.5	3.9	4.3	4.9
	AST109	01-03-00-00	7.46	4.0	3.6	4.0	4.4	5.0
	AST109	01-00-06-01	7.96	4.6	4.3	5.0	5.6	6.3
	AST109	01-03-00-01	7.96	4.7	4.4	5.1	5.7	6.4
	AST109	01-00-07-00	8.46	5.5	5.0	5.7	6.3	7.0
	AST109	01-03-01-00	8.46	5.6	5.1	5.8	6.4	7.1
	AST109	01-00-07-01	8.96	6.4	6.0	6.9	7.7	8.7
	AST109	01-03-01-01	8.96	6.5	6.1	7.0	7.8	8.8
	AST109	01-00-08-00	9.46	7.4	6.8	7.7	8.5	9.5
	AST109	01-04-00-00	9.46	7.5	7.0	7.8	8.7	9.7
	AST109	01-00-08-01	9.96	8.5	8.0	9.1	10.2	11.4
	AST109	01-04-00-01	9.96	8.6	8.1	9.3	10.3	11.6

Tab. 5.2 Required ballast for installation of AST109 towers at 0.2 kn/m² wind pressure

TOWERS AT INSTALLATION			Required total ballast (kN)				
			Tower type				
Wind pressure	Tower name	Hmax [m]	AST109-109 (1.09 x 1.09 m)	AST109-157 (1.09 x 1.57 m)	AST109-207 (1.09 x 2.07 m)	AST109-257 (1.09 x 2.57 m)	AST109-307 (1.09 x 3.07 m)
0.2 kN/m²	AST109 01-00-00-01	1.96	1.2	1.4	1.6	1.8	2.1
	AST109 01-00-01-00	2.46	1.5	1.6	1.8	2.0	2.2
	AST109 01-00-01-01	2.96	1.6	1.7	2.0	2.2	2.5
	AST109 01-00-02-00	3.46	2.0	1.9	2.1	2.3	2.7
	AST109 01-01-00-00	3.46	2.0	2.0	2.2	2.4	2.8
	AST109 01-00-02-01	3.96	2.8	2.8	3.1	3.4	3.8
	AST109 01-01-00-01	3.96	2.8	2.8	3.2	3.4	3.8
	AST109 01-00-03-00	4.46	3.8	3.6	4.0	4.3	4.7
	AST109 01-01-01-00	4.46	3.8	3.7	4.0	4.3	4.8
	AST109 01-00-03-01	4.96	4.8	4.8	5.4	5.9	6.5
	AST109 01-01-01-01	4.96	4.8	4.8	5.4	5.9	6.6
	AST109 01-00-04-00	5.46	6.0	5.8	6.4	6.9	7.6
	AST109 01-02-00-00	5.46	6.1	5.9	6.5	7.0	7.7
	AST109 01-00-04-01	5.96	7.3	7.2	8.1	9.0	9.9
	AST109 01-02-00-01	5.96	7.4	7.3	8.2	9.0	10.0
	AST109 01-00-05-00	6.46	8.7	8.4	9.3	10.1	11.1
	AST109 01-02-01-00	6.46	8.8	8.4	9.3	10.2	11.2

6. HEAD AND BASE PROJECTION LENGTH ADJUSTMENT DESCRIPTION

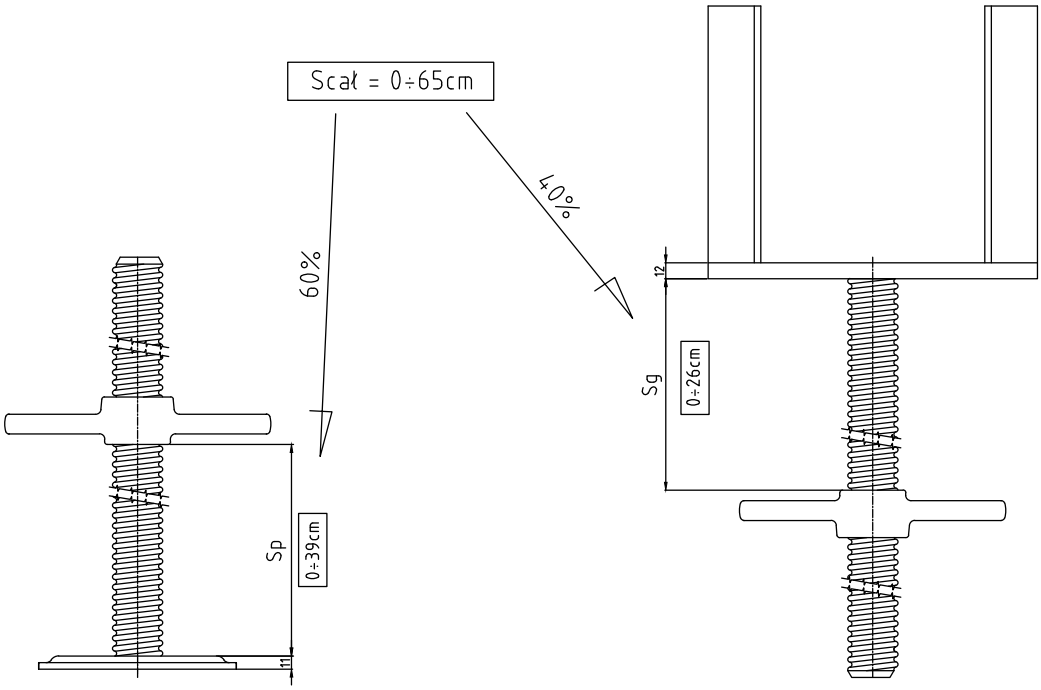

Steel Adjustable Base *Steel Adjustable Head*

The H_{max}, and H_{min} heights are specified according to the following rule:

$H_{max} = S_{integr.} + 0{,}1 +$ (sum of heights of the number of levels of the components that form the core of the tower)

$S_{integr.} = S_p + S_g$ – total adjustment – (m)

- $S_p = 0{,}6 \times S_{integr.}$, (for H_{min} $S_p = 0{,}1$ m) – base projection length – (m)
- $S_g = 0{,}4 \times S_{integr.}$, (for H_{min} $S_g = 0{,}1$ m) – head projection length – (m)
- 0.1, – constant value including the thickness of head and foot nuts and plates – (m)

- Steel frame 0.5x1.09 height – H-0.5 m
- Steel frame 1.0x1.09 height – H-1.0 m
- Steel frame 2.0x1.09 height – H-2.0 m
- Steel frame 0.71x1.09 height – H-0.71 m

Note:
The heights of the towers in the data/configuration tables do not include the thickness of wooden sleepers or other load-bearing components (concrete slabs) where the AST109 towers are placed.

7. SAMPLE TOWER ASSEMBLIES

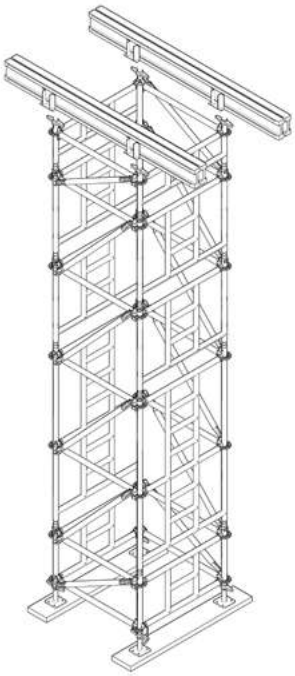

1. Tower 1.09m x 1.09m

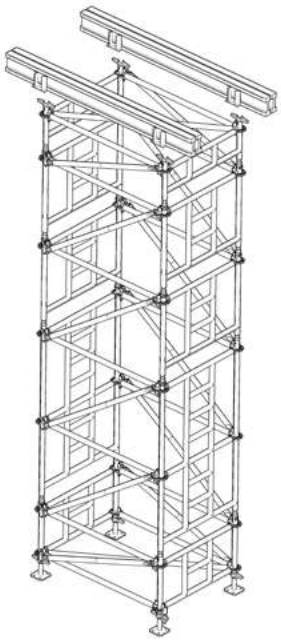

2. Tower 1.09 m x 1.57 m

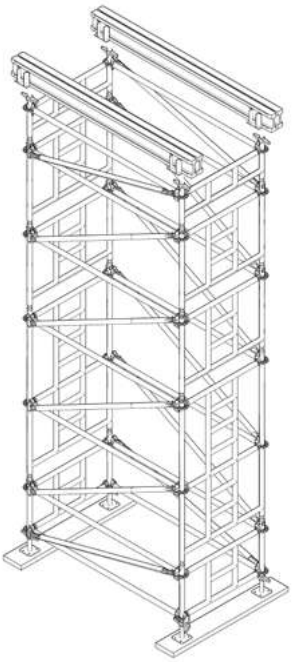

3. Tower 1.09 m x 2.07 m

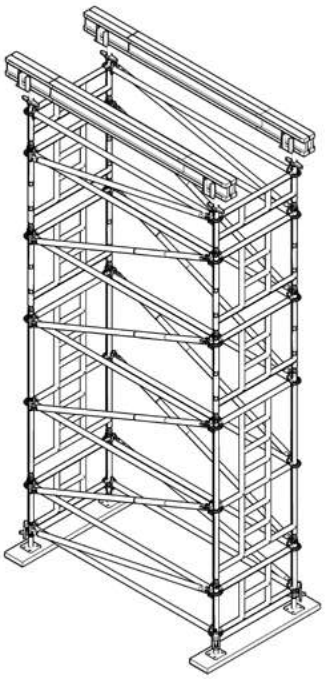

4. Tower 1.09 m x 2.57 m

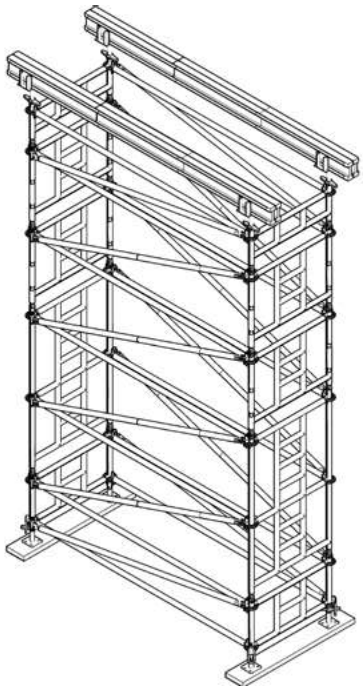

5. Tower 1.09 m x 3.07 m

Prepared by: Mirosław Sawicki, MSc, Eng.

8. CONFORMITY CERTIFICATE

Łukasiewicz
WIT

Sieć Badawcza Łukasiewicz -
Warszawski Instytut Technologiczny
CENTRUM JAKOŚCI I CERTYFIKACJI
ul. Racjonalizacji 6/8, 02-673 Warszawa, tel. (+4822) 853 97 23
tel. (+4822) 853 97 00, e-mail: info@wit.lukasiewicz.gov.pl

PCA Polskie Centrum Akredytacji – Certyfikacja Wyrobów
AC 002

CERTYFIKAT ZGODNOŚCI
NR Z/002/031/23

Nazwa i adres posiadacza certyfikatu *Name and address of the certificate holder*	**ALTRAD-MOSTOSTAL Sp. z o.o. ul. Starzyńskiego 1 08-110 Siedlce**
Nazwa i adres producenta *Name and address of the manufacturer*	**ALTRAD-MOSTOSTAL Sp. z o.o. ul. Starzyńskiego 1 08-110 Siedlce**
Rodzaj wyrobu *Product description*	**Wieża podporowa**
Model/typ wyrobu *Model/type of the product*	**AST 109**
Program certyfikacji *Certification Program*	**P-CD/ZW - program typu „N" w rozumieniu normy PN-EN ISO/IEC 17067:2014-01**
Wyrób spełnia wymagania The product meets the *requirements*	**PN-EN 12812:2008 z wyłączeniem punktów 7.4.; 8.2.3.; 8.2.5.; 8.2.6.; 8.3.1.; 8.3.2.; 8.4.** **PN-EN 12813:2005**
Okres ważności certyfikatu *Certificate validity*	**Od 30 czerwca 2023 r. do 29 czerwca 2026 r.**
Prawa i obowiązki posiadacza certyfikatu są zawarte w: *Rights and duties of the certificate holder are stated in:*	**Umowa nr 031/23 o stosowaniu certyfikatu zgodności z dnia 30 czerwca 2023 r.**

Niniejszy certyfikat potwierdza zgodność wyrobu z wymaganiami. Certyfikat dotyczy wyłącznie wyrobów identycznych z egzemplarzem, który był badany.
This certificate confirms compliance of the product with the requirements. The certificate is valid exclusively for those products identical with the tested item (s).

UWAGA:
- Niniejszy certyfikat dotyczy wieży podporowej AST 109, której dane techniczne oraz informacje o montażu i zakresie stosowania są zawarte w „Wieże Podporowe AST109 Instrukcja Montażu", Wydanie: Siedlce 17.02.2023

DYREKTOR CENTRUM JAKOŚCI I CERTYFIKACJI
mgr inż. Michał Koźlik
Warszawa, dnia 30 czerwca 2023 roku

SIEĆ BADAWCZA ŁUKASIEWICZ – WARSZAWSKI INSTYTUT TECHNOLOGICZNY

DYREKTOR INSTYTUTU
dr inż. Marcin M. Kruk

NOTES

MOSTOSTAL
SCAFFOLDING
FORMWORK
ALTRAD

ALTRAD-MOSTOSTAL Spółka z o.o.
ul. Starzyńskiego 1, 08-110 Siedlce - Poland
Tel. +48 25 644 72 84 - Tel. +48 25 644 82 93 - Email: handlowy@altrad-mostostal.pl
www.altrad-mostostal.pl

07.2023